SECTIONAL VALVE

VD6A

Technical catalogue

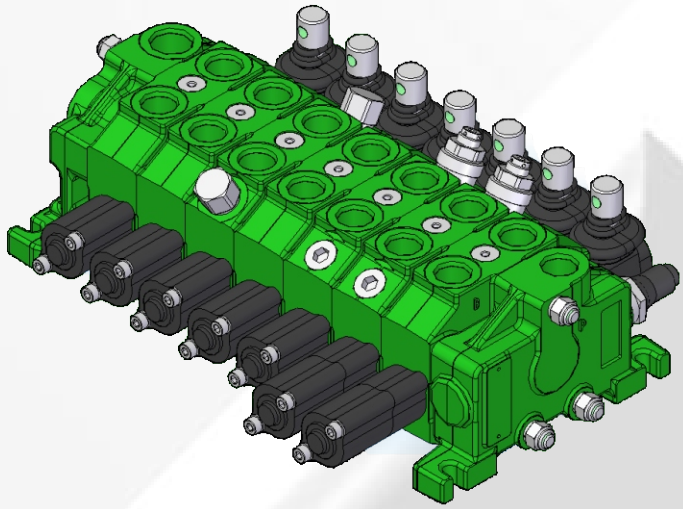

E0.05.1011.02.03

COMPANY
WITH QUALITY SYSTEM
CERTIFIED BY DNV
=ISO 9001/2000=

salami™

INDEX

When in our catalogues you will find this symbol, please read carefully

E0.05.1011.02.03

The data in this catalogue refers to the standard product.
The policy of Salami S.p.A. consists of a continuous improvement of its products.It reserves the right to change the specifications of the different products whenever necessary and without giving prior information.
If any doubts, please get in touch with our sales departement.

GENERAL FEATURES

Among all hydraulic directional control valves used in the field of mobile equipment applications, the spool valve is the most popular. The sectional valve type allows construction flexibility.Salami VD6A directional control valve is modular construction and consist of an inlet section, up to 8 working modules and an outlet section.All these elements are secured in one block by means of tie-rods.(For more than 8 working modules please contact our sales dept.)

FEATURES

VD6A directional control valve has the following:

- cast-iron body (inlet section, working section, outlet section)
- parallel circuit, load check valve protection on each section
- series circuit, load check valve protection on each section (possibility of 2nd load check valve on series line)
- tandem circuit, load check valve protection on each section
- several types of mid modules
- possibility of venting valve
- possibility of power beyond configuration and possibility of closed center
- spool construction in steel, hardened and nichel-plated to obtain a higher surface hardness and a better corrosion resistance
- several types of spool: double, single acting, spool motor, float position etc.
- minimum tolerance between the spools and the body to obtain a minimum internal leakage
- interchangeabilty of all the spools
- possibility of auxiliary valve either on port A or B or on both
- several spool control devices and spool positioning devices

VALVE AND DEVICE TYPES

In order to meet the most stringent demands and to offer a wider range of applications, the following types of valves and devices are available:

Valves

- direct main relief valve: controls the maximum pressure in the circuit when one or more spools are on end stroke located on "A" or "B" port side, can be:
  direct type version up to 350 bar - *5100 psi*
- electric and external hydraulic piloted venting valve: located in the opposite cavity of the main relief valve, in the electric release is available as 12 or 24 Vdc and normally open or normally closed versions
- adjustable or fixed pressure compensated priority flow valve, electrical proportional operated or handwheel operated
- manual pressure switch valve
- overload valve on port A or/and B:set at a higher value (in comparison with the main relief valve), it protects the working ports from peack pressure
- overload and anticavitation valve on port A or/and B: set at a higher value (in comparison with the main relief valve), it protects the working ports from peack pressure, avoids cavitation in the system created by the inertia.
- anti-cavitation check valve on port A or/and B: avoids cavitation in the system created by the inertia.
- electric and external hydraulic piloted venting valve on port A or/and B
- conversion valve on A or/and B port, allows to obtain single acting function starting from double acting spool
- fixed flow restrictor: directly fitted on the "A/B" ports orifice
- load check valve mechanically operated directly fitted on the "B" ports orifice

Devices

- handle controls
- cross lever: allows to acting two spools with one manual joystick
- cable remote control
- control device for microswitches: for the operation with electric d.c. motor driven pumps at one or more rotation speeds
- hydraulic kick-out: returns the spool automatically to the neutral position when the pre-set pressure of port "A" or "B" is exceeded
- anti-tilt device: the spool returns automatically in neutral position when the pressure reaches a pre-set value to avoid cranes from becoming unstable
- pneumatic proportional control available also with float position
- electropneumatic control
- hydraulic proportional control available also with float position
- direct electric on-off control with emergency manual device
- electrohydraulic on-off and proportional control
- several spool positionings device to return the spool to neutral position or to lock the spool in working position

TECHNICAL DATA

Spools	from 1 to 8 (for more working modules pls. contact our sales department)		
Nominal flow	Q	45 l/min	(*12 gpm US*)
☞ Max flow		60 l/min	(*16 gpm US*)
Max pressure	port P	350 bar	(*5100 psi*)
	ports A/B	350 bar	(*5100 psi*)
	☞ port T	25 bar	(*363 psi*)
Internal leakage at 160 bar (*2285 psi*)	ports A/B → T	18 ÷ 25 cm^3/min	(*1.1 ÷ 1.52 cu.in./min*)
For lower leakage please contact our sales dept.			
Solenoid control 45W - 60W the leakage is		70 ÷ 90 cm^3/min	(*4.3 ÷ 5.49 cu.in./min*)
Solenoid control 31W the leakage is		100 ÷ 120 cm^3/min	(*6.1 ÷ 7.32 cu.in./min*)
Spool stroke (positions 1 and 2)		± 6 mm	(*0,236 in.*)
Spool stroke (position 4, float or regenerative)		± 6 + 4 mm	(*0.236 + 0.157 in.*)
For direct solenoid control - spool stroke		± 2.5 mm	(*0,098 in.*)
Stroke of the overcenter spools		± 4.5 mm	(*0.177 in.*)

☞ In case you need flows from 45 l/min to 60 l/min please contact our sales dept.

☞ For higher back pressure please contact our sales dept.

All technical data carried out using mineral oil with viscosity of 16 cSt and contamination level 19/16 as ISO 4406.

Nominal flow meaning: flow causing 1 bar (*14.5 psi*) pressure drop each section, with spools in neutral position

WORKING CONDITIONS

Hydraulic fluid	mineral oil according to DIN 51524		
Viscosity			
	viscosity range	10...400 mm^2/sec	(*0.15...7.13 sq.in./sec*)
	optimal viscosity	12...75 mm^2/sec	(*0.19...1.16 sq.in./sec*)
Temperature			
	fluid range temperature	-20...85 °C	(*-4...185 °F*) NBR seals
	suggested range	30...60 °C	(*86...140 °F*) NBR seals
Maximum contamination level		NAS 1683: class 9	ISO 4406: 19/16
Room temperature		-30...60 °C	(-22...140 °F)
Working limits		see diagrams at page 6	
Pressure drop		see diagrams at page 7	
For operation with fire resistant fluid, please contact our sales department			

OPERATING PRINCIPLE

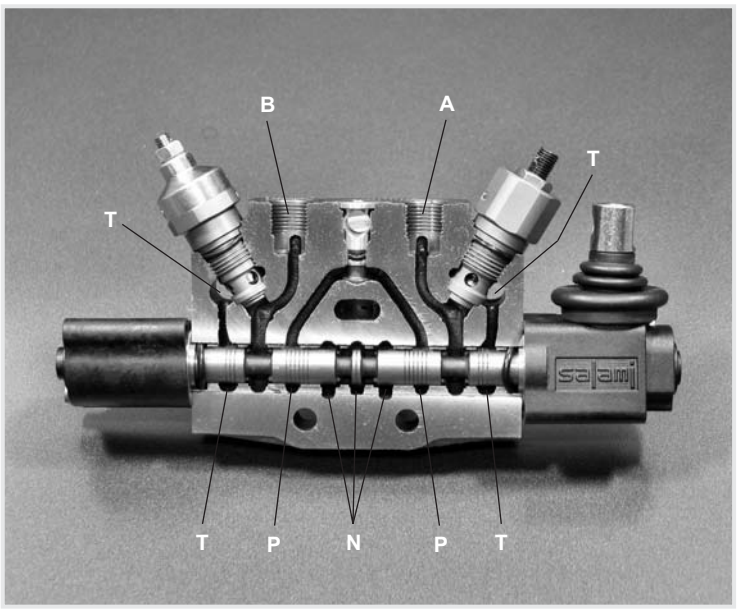

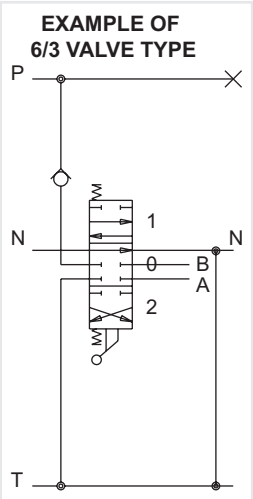

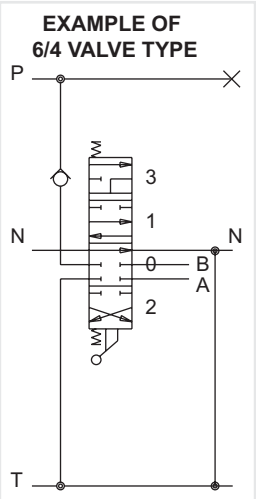

The picture show the P working module
with the paths N - P - A - B - T.

Salami directional control valves belong to the 6/3 (or 6/4) type; they can control 6 gallery in 3 (or 4) spool positions simultaneously.
They are open circuit types: when the spool is in neutral position, the fluid flows directly to the tank with minimum internal pressure drops (approximatively 1 bar / 14.5 psi for each spool at nominal flow).
When the spool is moved from this position, the neutral gallery is gradually throttled and the connection between pump and actuator, through the corresponding port, is made.
When pressure exceeds the value of the pressure existing in port A or B, the fluid flows through the load check valve to the actuator.

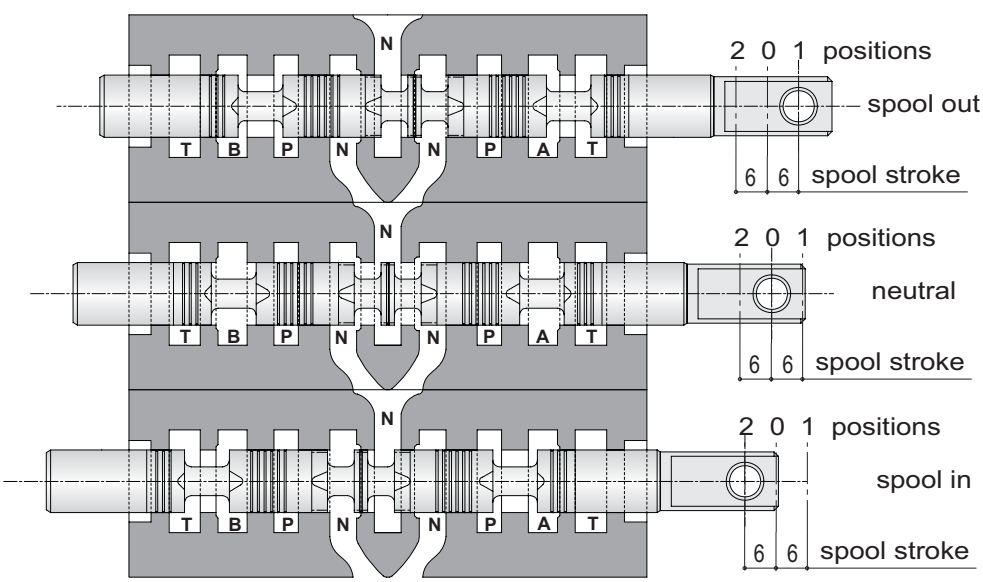

IMPORTANT
Looking at this side of the spool, we usually say: spool in when the spool is pushed into the valve and spool out when it is pulled out of the valve.
Independing on assembling of the spool on "A" or "B" side

There are two characteristic phases in the spool stroke (6 mm - 0,236 in.):
a) the overlap phase (about 18% of the stroke) guarantees minimum internal leakages in neutral position;
b) the progressive flow regulation phase (82% of the stroke).
Both pictures show a 6/3 valve type with double acting spool only as principle of functioning.
Salami VD6A is available in different solutions.

HYDRAULIC FLUIDS

Usually a mineral-base oil with a good viscosity index should be used, preferably with good lubricating properties and corrosion, oxidation and foaming resistant.
Sometimes the fluids supplied by the manufacturers do not satisfy purity requirements (see page 3 WORKING CONDITIONS). It is therefore necessary to filter the fluid carefully before filling. Your supplier can give you the information about NAS class of its fluids. To maintain the proper purity class, the use of filters of high dirt capacity with clogging indicator is recommended.
Under humidity conditions it is necessary to use hygroscopic salts.
For operation with fire resistant and ecological fluids, please contact our technical department.

INSTALLATION

When proceeding to mount the unit on the structure and to connect fittings to work ports, it is necessary to comply with the values of tightening torques.
The attachment of linkages to spools should not affect their operation. The mounting position can be vertical with inlet module on the top or horizontal.

Standard tightening torques - Nm / *lbft*

FITTING TYPE	P and PL ports	A and B ports	T and TL ports
BSP (ISO 228/1)	G 3/8	G 3/8	G 1/2
with o-ring seal	**30 / *22.1***	**30 / *22.1***	**50 / *36.9***
with copper washer	40 / *29.5*	40 / *29.5*	**60 / *44.2***
with steel washer	**40 / *29.5***	**40 / *29.5***	**60 / *44.2***
SAE	**SAE 8 (3/4-16 UNF)**	**SAE 8 (3/4-16 UNF)**	**SAE 10 (7/8-14 UNF)**
with o-ring seal	**30 / *22.1***	**30 / *22.1***	**60 / *44.2***

FILTRATION

The contamination of the fluid in the system greatly affects the life of the unit. Above all, contamination may result in irregular operation, wear of seals in valve housings and failures. Once the initial contamination level of the system has been reached, it is necessary to limit any increase of contamination installing an efficient filtration system (see working conditions page 3).

PIPES

Pipes should be as short as possible, without restrictions or sharp bends (especially the return lines). Before connecting pipes to the fittings of the corresponding components, make sure that they are free from burrs and other contamination.
As a first approximation, for a mobile machine with standard length pipes, their width should guarantee the following values of fluid speed*:

6 ÷ 10 m/sec	inlet pipe
3 ÷ 5 m/sec	outlet pipe

19,7 ÷ 32,8 ft/sec	inlet pipe
9,9 ÷ 16,4 ft/sec	outlet pipe

the lowest values of fluid speed are required in case of wide temperature range and/or for continuous duty.

* $[v = \frac{21,2 \times Q}{d^2}$ v = fluid speed [m/sec], Q = flow [l/min], d = pipe internal diameter [mm]

PERFORMANCE DATA

The characteristics in this catalogue are typical measured results.
During measuring a mineral based hydraulic oil with a viscosity of 16 cSt at a temperature of 50°C was used.

FOR FURTHER DETAILS PLEASE CONTACT OUR SALES DEPARTEMENT

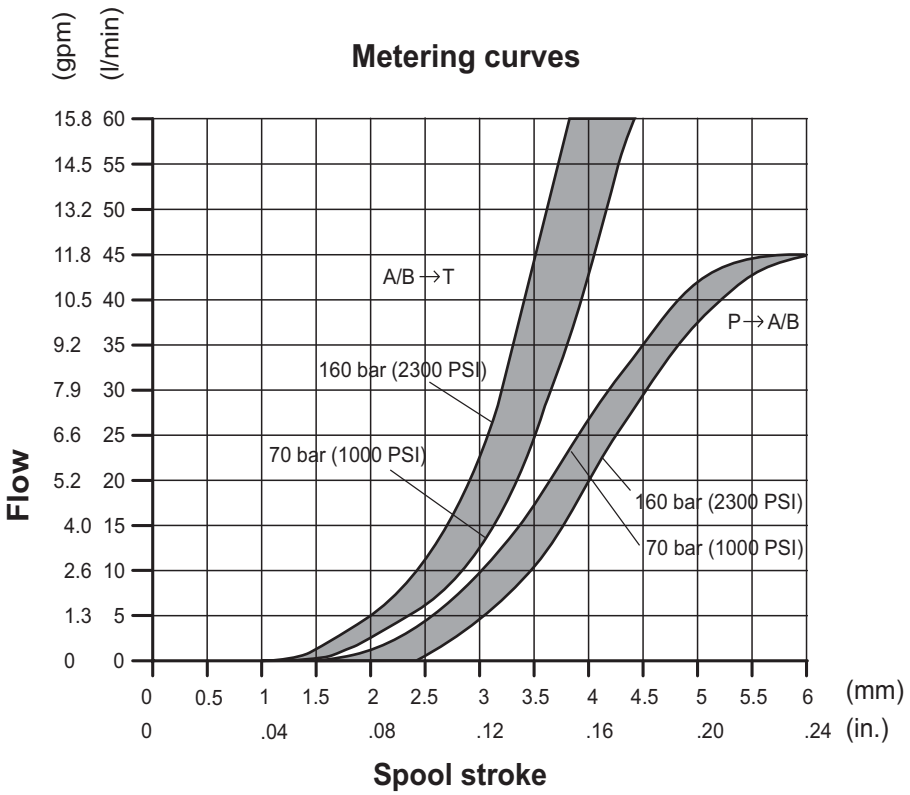

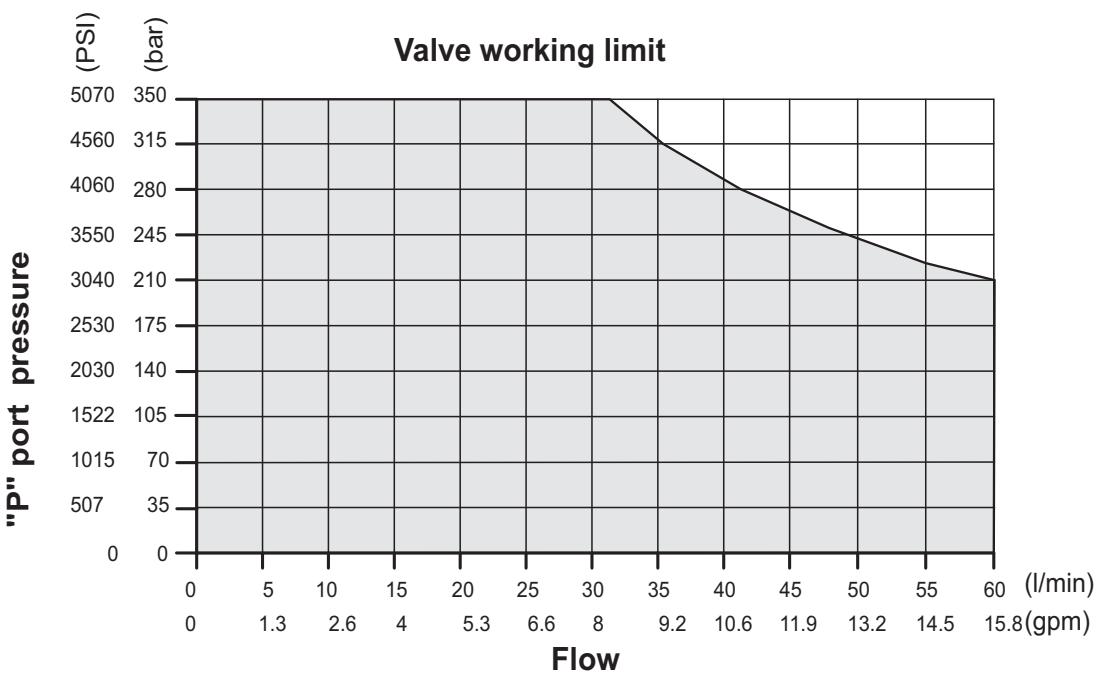

The data of this diagram have been obtained with a force of:
stroke beginning 80 N - stroke end 105 N and standard leakage data.

PERFORMANCE DATA

The characteristics in this catalogue are typical measured results.
During measuring a mineral based hydraulic oil with a viscosity of 16 cSt at a temperature of 50°C was used.

FOR FURTHER DETAILS PLEASE CONTACT OUR SALES DEPARTEMENT

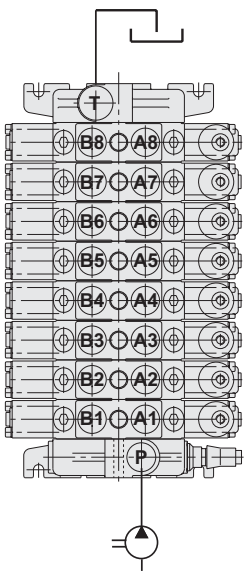

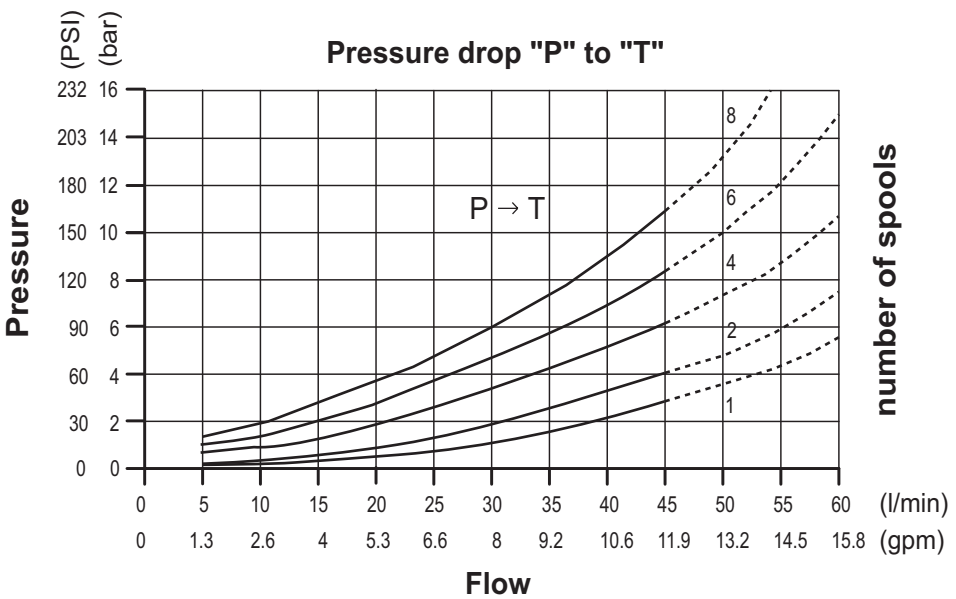

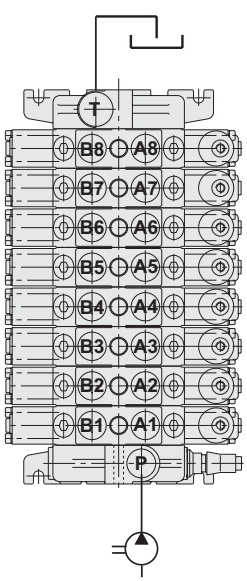

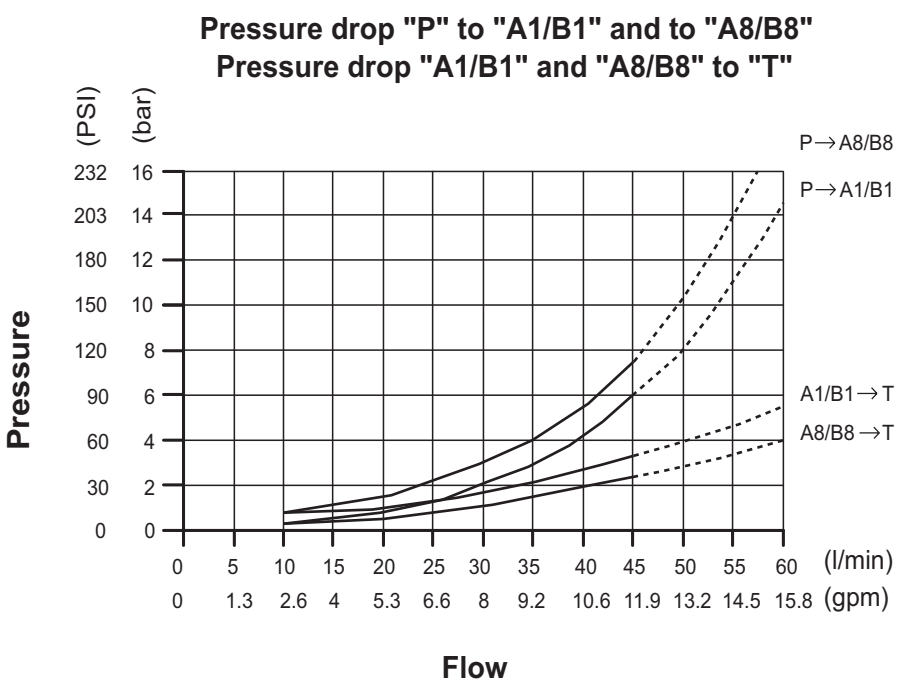

DIMENSIONS FROM 1 TO 8 WORKING MODULES

In case of inlet with priority flow valve, adjustable or fixed setting, the inlet module is different.You can see it at page 11.Moreover you can have in your assembling series circuit working module and/or mid inlet module.You can see their different dimensions from page 16 to page 24.Finally you can see the dimensions of all spool controls and spool positionings from page 36 to page 51.

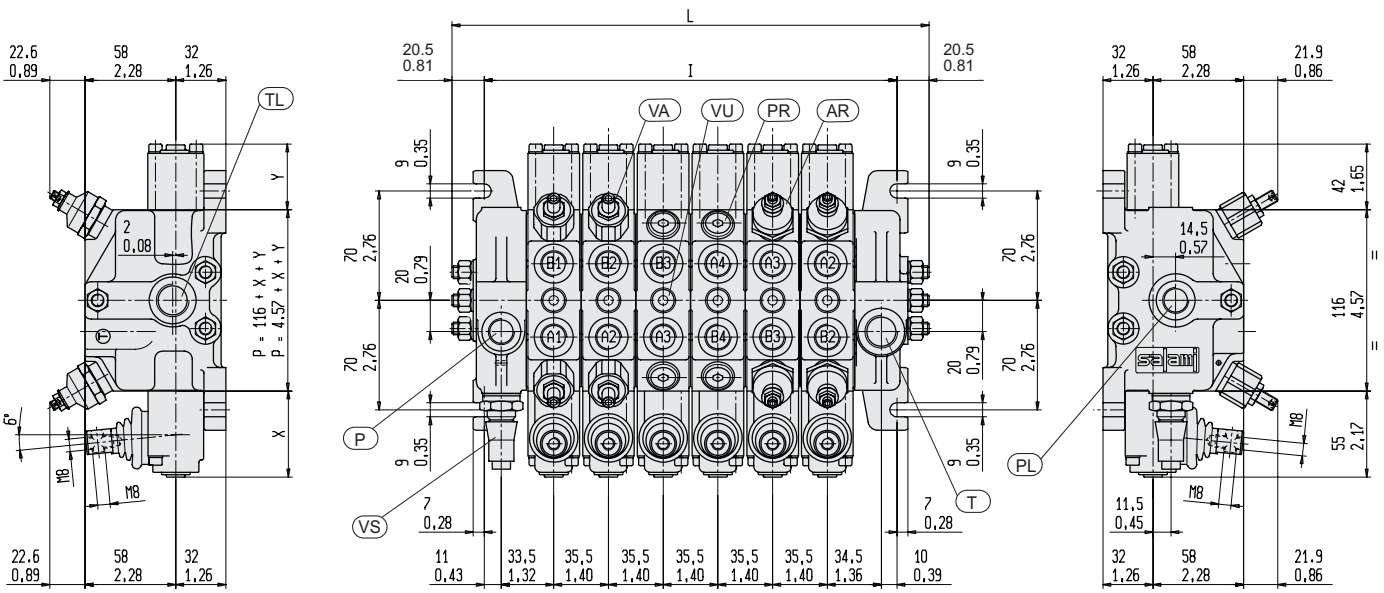

The drawing shown is just an example.The overall dimensions you read are valid for all the VD6A except the parametric dimensions "L" and "I" depending of the number of working sections.The parametric dimension "P" depends on a fixed dimension of 116 mm (4.57 in.) to wich you have to had the "X" and "Y" dimensions that you can find in the spool controls and spool positionings pages.

Spools		1	2	3	4	5	6	7	8
I	mm	89	124.5	160	195.5	231	266.5	302	337.5
	in	*3.5*	*4.90*	*6.30*	*7.70*	*9.10*	*10.49*	*11.89*	*13.29*
L	mm	130	165.5	201	236.5	272	307.5	343	378.5
	in	*5.12*	*6.51*	*7.91*	*9.31*	*10.71*	*12.10*	*13.50*	*14.90*
Weight	Kg.	5.56	7.7	9.8	11.9	14.1	16.3	18.4	20.5
	lb.	*12.2*	*16.9*	*21.6*	*26.2*	*31*	*35.9*	*40.5*	*45.1*

INDEX:

P = top inlet port
PL = side inlet port
T = top outlet port
TL = side outlet port
A/B = work ports
VS = main relief valve
VA = overload valve
AR = overload and anti-cavitation valve
PR = plug for auxiliary valve cavity
VU = load check valve

PORT SIZES	P - PL - TL1 - P3	T - TL	A - B
BSP ISO 228	G 3/8	G 1/2	G 3/8
SAE ISO 176	SAE#8 3/4 - 16 UNF	SAE#10 7/8 - 14 UNF	SAE#8 3/4 - 16 UNF
ISO 262 - ISO 6149	M 18 x 1.5	M 22 x 1.5	M 18 x 1.5
BSPF JIS B 2351	G 3/8	G 1/2	G 3/8

For smaller or bigger thread ports, please contact our sales department

PORTS

Following are standard ports. For different port types, please contact our sales department.

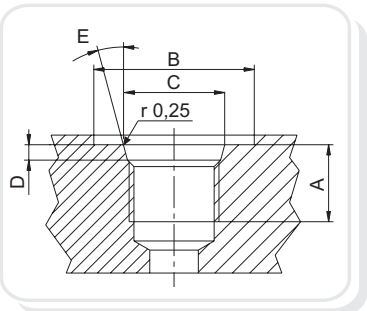

SAE UN-UNF (ISO 725)						
Dimensions		9/16 -18 UNF SAE6		3/4 - 16 UNF SAE8		7/8 - 14 UNF SAE10	
mm	In.						
A		13	0,51	15	0,59	17	0,67
B		25	0.83	30	1,18	34	1,34
C		15.6	0.61	20.6	0.81	23.9	0.94
D		2,5	0,10	2.5	0.10	2.5	0.10
E		15°		15°		15°	

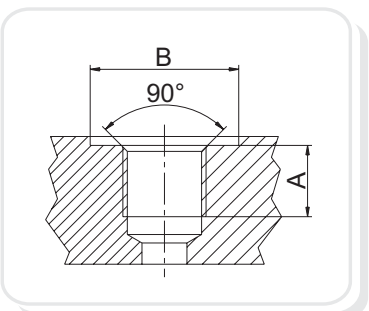

BSP (ISO 228)						
Dimensions		G1/4		G3/8		G1/2	
mm	In.						
A		14	0,55	14	0,55	16	0,63
B		19	1,75	23	1,91	27	1,06

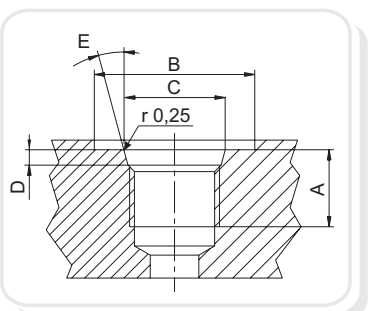

METRIC (ISO 262 - ISO 6149)*								
Dimensions		M18 x 1.5				M22 x 1.5			
mm	In.	ISO 262		ISO 6149		ISO 262		ISO 6149	
A		14	0.55	14,5	0,57	16	0,63	16	0,63
B		27,5	1.08	29	1,14	31,5	1,24	34	1,34
C				19,8	0,78			23,8	0,94
D				2,4	0.09			2,4	0,09

*Available for quantity, please contact our sales dept.

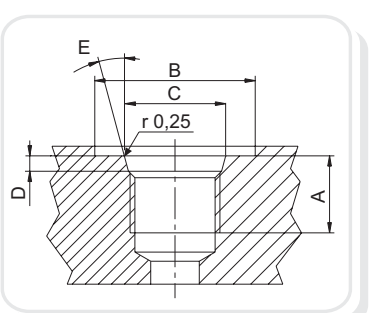

BSPF O-RING BOSS (JIS B 2351)						
Dimensions		G 1/4		G 3/8		G 1/2	
mm	In.						
A		12	0,47	12	0,47	16	0,63
B		24	0,94	28	1,10	34	1,34
C		15.6	0,61	18.6	0,73	22.6	0,89
D		2,5	0,10	2,5	0,10	2,5	0,10
E		15°		15°		15°	

INLET MODULE (HYDRAULIC CIRCUITS)

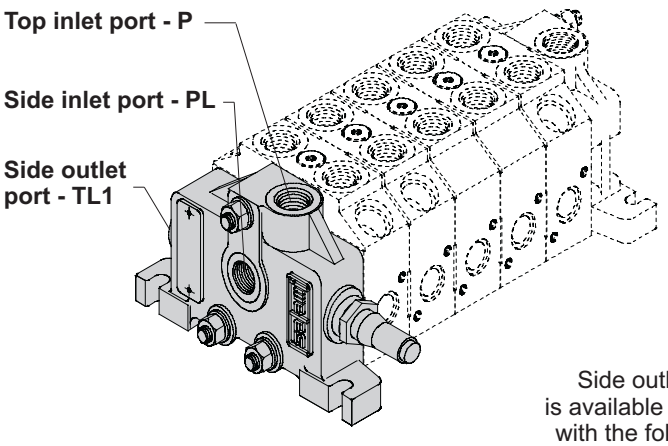

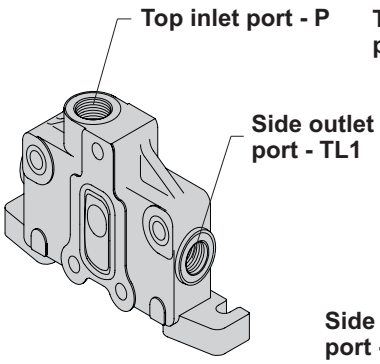

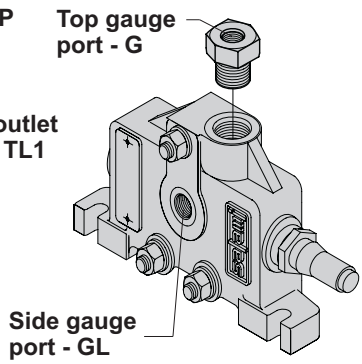

Side outlet port (TL1) is available only on this side with the following threads:
BSP (ISO 228) - G 3/8
SAE UN-UNF (ISO725) - SAE 8

Top gauge port is obtained to add special plug to inlet module comm. code 02, and are available with the following threads:
BSP (ISO 228) - G 1/4
SAE UN-UNF (ISO725) - SAE 4

COMMERCIAL CODES

01 Top inlet port

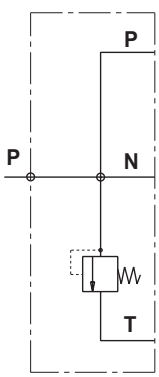

02 Side inlet port top inlet port plugged

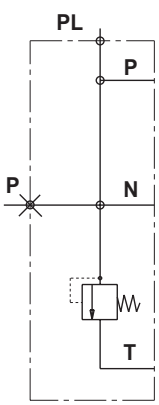

03 Top and side inlet ports

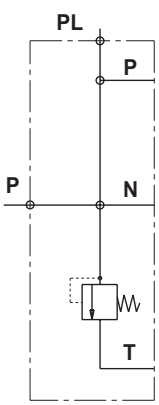

09 Top inlet and side outlet (TL1) ports

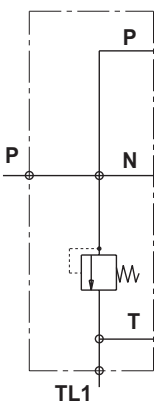

Available for quantity

10 Side inlet and outlet (TL1) ports top ports plugged

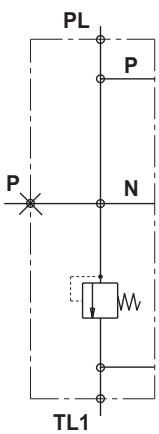

Available for quantity

21 Top inlet port with side gauge port

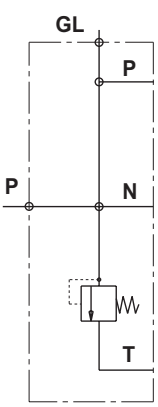

22 Side inlet port with top gauge port

See drawing above

30 Side inlet and outlet (TL1) ports with top gauge port

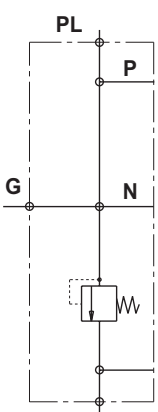

Available for quantity

INLET MODULES (DIMENSIONS)

IN ALL THESE COMMERCIAL CODES PORT SIZE ARE SHOWN ON PAGE 8

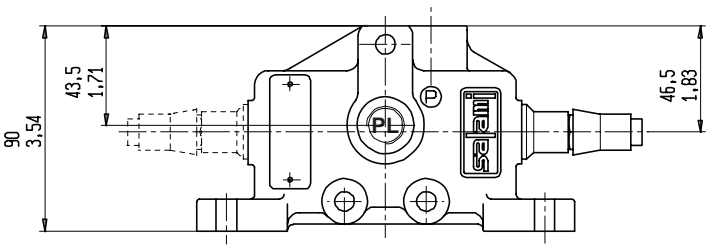

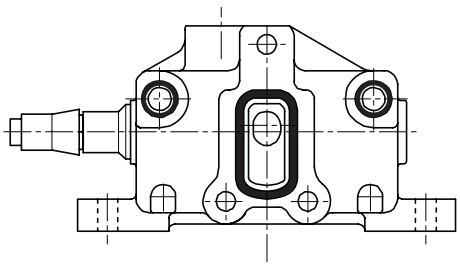

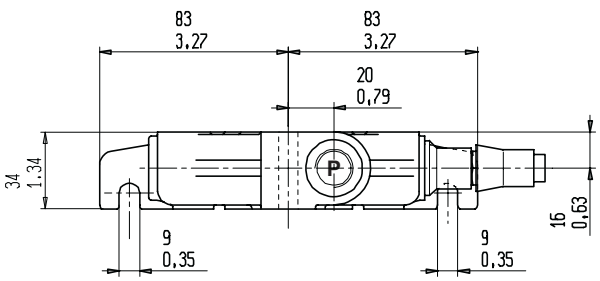

Standard inlet module is machined for the main relief valve assembled as shown in this drawing. It is also possible to have the m.r.v. at the opposite side, you need to specify it in phase of order.You can have the venting valve too, electric operated or external hydraulic piloted. It can be located on both side with or without m.r.v.In case of m.r.v., the venting valve is located at the opposite side. Data sheets of valves for the inlet module from page 30 to page 31.

INLET MODULE with built-in priority flow valve (DIMENSIONS)

Standard version

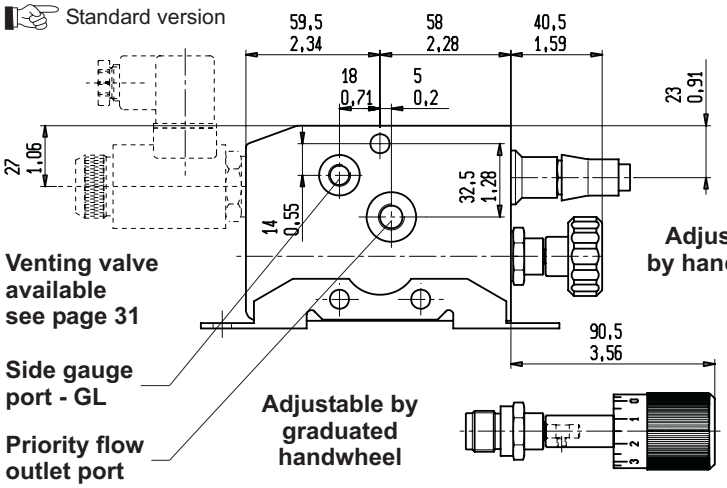

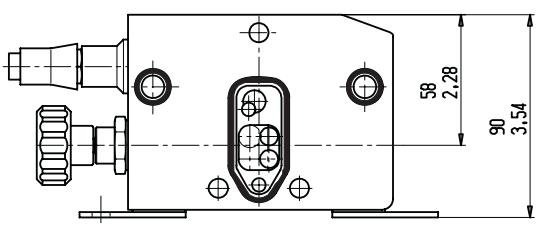

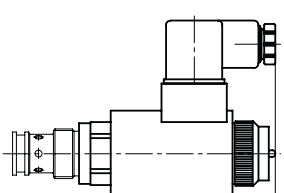

Adjustable by
proportionallly operated
solenoid cartridge valve

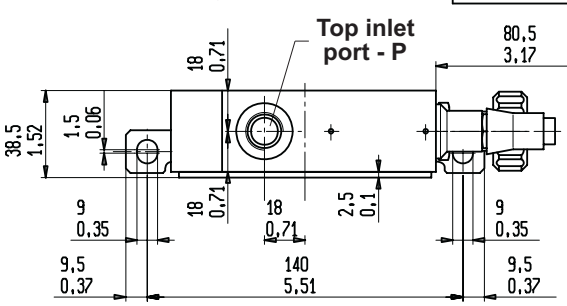

Available also with main relief valve and adjustable priority flow valve at the opposite side

Available only for quantity

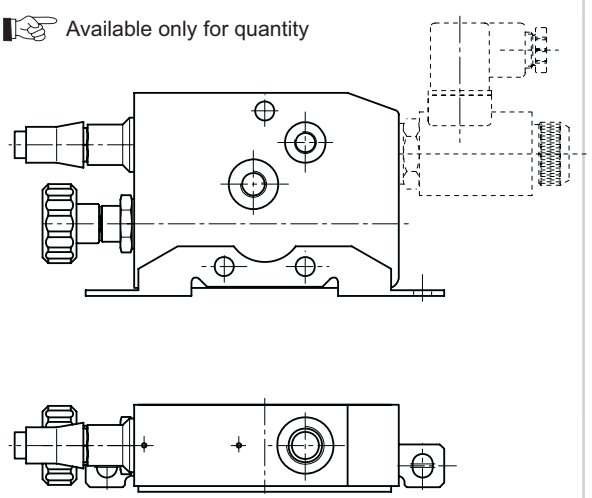

INLET MODULE WITH ADJUSTABLE PRIORITY FLOW VALVE

Inlet module with priority flow valve is available with priority flow which may go inside the directional control valve or be brought outside through the PF port. ☞ In case of external priority flow, at the downstream, you can assemble any working module, in case of internal priority flow you need to assemble only the working modules of pages 19.

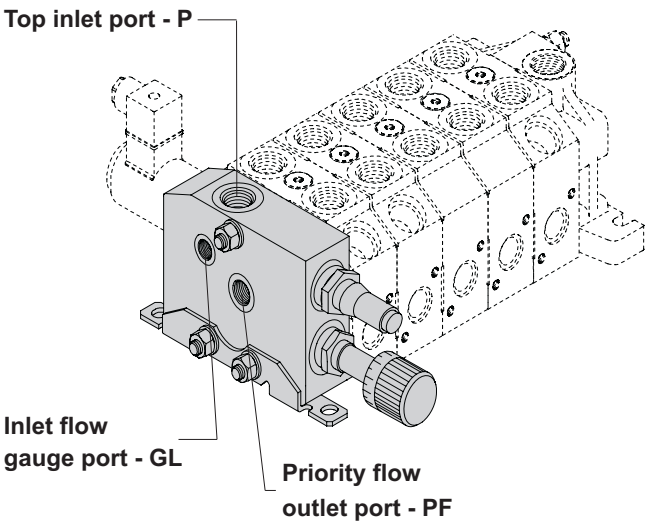

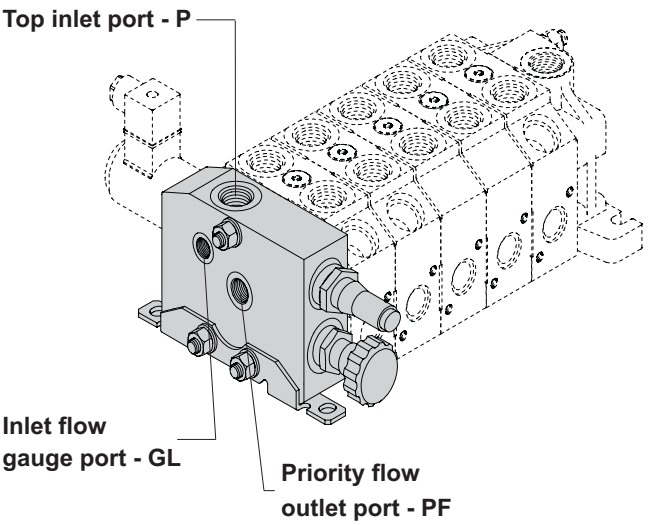

PORT SIZES	P	PF	GL
BSP ISO 228	G 3/8	G 1/4	G 1/8
METRIC ISO 262	M 18 x 1.5	M 14 x 1.5	M 12 x 1.5
SAE ISO 176	SAE#8 3/4 - 16 UNF	SAE#4 7/16 - 20 UNF	SAE#2 5/16-24 UNF

The p.f.v. on the inlet is available with two kinds of regulation ranges depending on two different types of internal register. Pls. specify register 1 or 2 in the order. Inlet flow gauge port **GL** available on request.

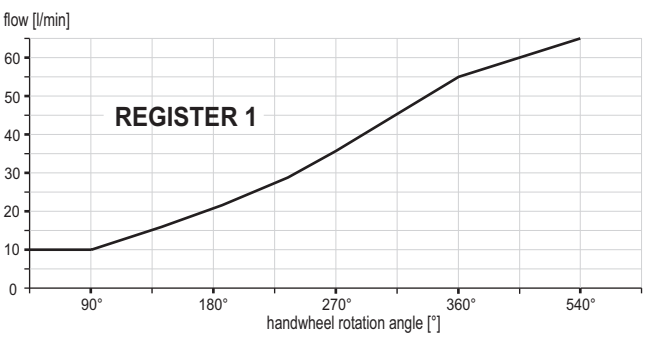

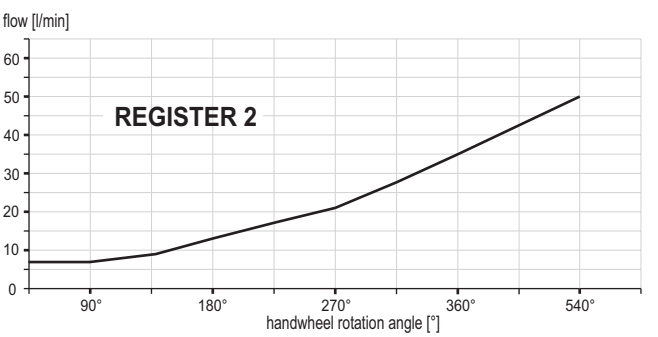

31 Top inlet port with internal adjustable priority flow

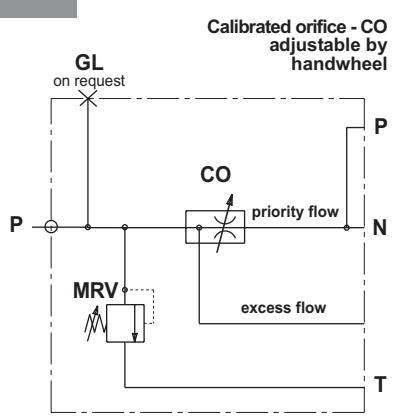

32 Top inlet port with external adjustable priority flow

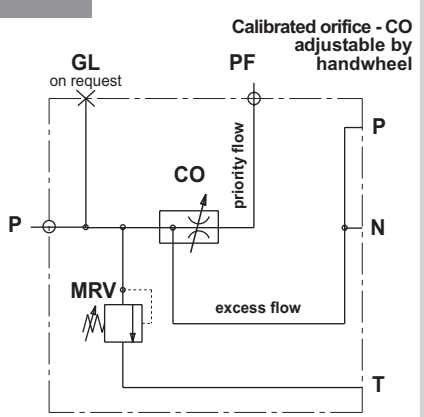

INLET MODULE WITH FIXED PRIORITY FLOW VALVE

Inlet module with priority flow valve is available with priority flow which may go inside the directional control valve or be brought outside through the PF port. ☞ In case of external priority flow, at the downstream, you can assemble any working module, in case of internal priority flow you need to assemble only the working modules of pages 19.

Range of available priority flows:
4 l/min - *1.06 gpm US*
5 l/min - *1.32 gpm US*
6.3 l/min - *1.66 gpm US*
8 l/min - *2.11 gpm US*
10.5 l/min - *2.77 gpm US*
16.5 l/min - *4.36 gpm US*

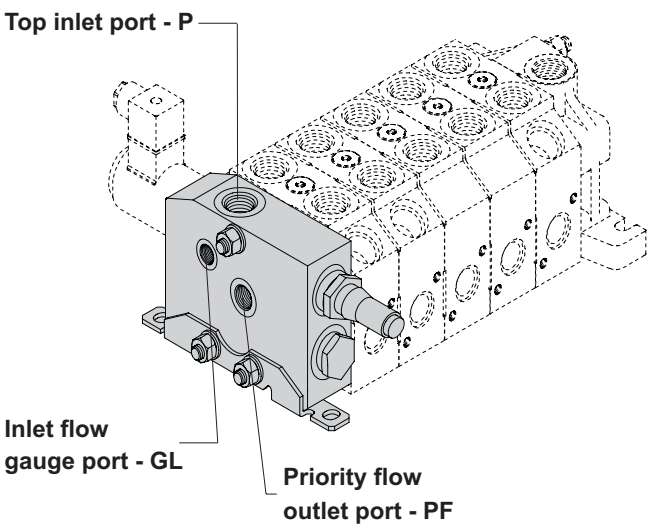

The p.f.v. on the inlet is available with six values of priority flows(as you can see in the table above),
depending on six different types of calibrated orifices.
Pls. specify your value in the order.
Inlet flow gauge port **GL** available on request.

PORT SIZES	P	PF	GL
BSP ISO 228	G 3/8	G 1/4	G 1/8
METRIC ISO 262	M 18 x 1.5	M 14 x 1.5	M 12 x 1.5
SAE ISO 176	SAE#8 3/4 - 16 UNF	SAE#4 7/16 - 20 UNF	SAE#2 5/16-24 UNF

Top inlet port with external fixed priority flow **33**

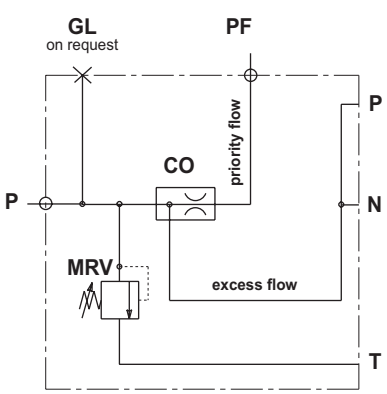

Calibrated orifice - CO

Top inlet port with internal fixed priority flow **34**

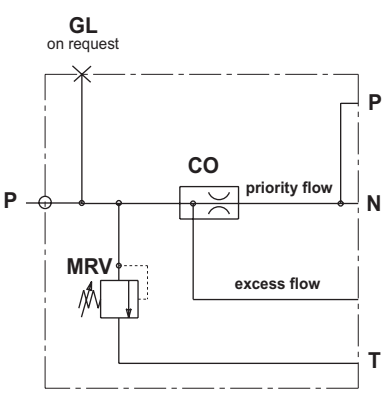

Calibrated orifice - CO

INLET MODULE WITH ELECTRICALLY ADJUSTABLE PRIORITY FLOW VALVE

Inlet module with priority flow valve is available with priority flow which may go inside the directional control valve or be brought outside through the PF port. ☞ In case of external priority flow, at the downstream, you can assemble any working module, in case of internal priority flow you need to assemble only the working modules of pages 19.

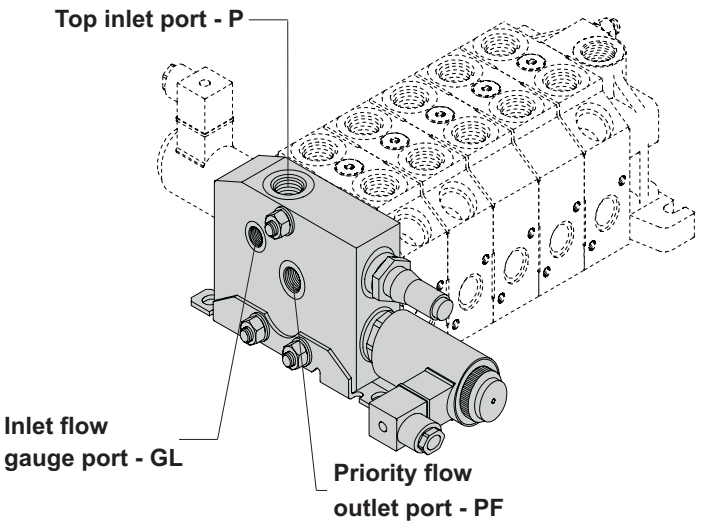

CONNECTOR
DIN 43650 - A/ISO 4400

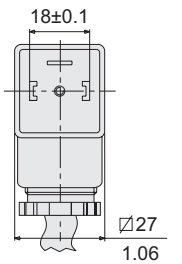

PORT SIZES	P	PF	GL
BSP ISO 228	G 3/8	G 1/4	G 1/8
METRIC ISO 262	M 18 x 1.5	M 14 x 1.5	M 12 x 1.5
SAE ISO 176	SAE#8 3/4 - 16 UNF	SAE#4 7/16 - 20 UNF	SAE#2 5/16-24 UNF

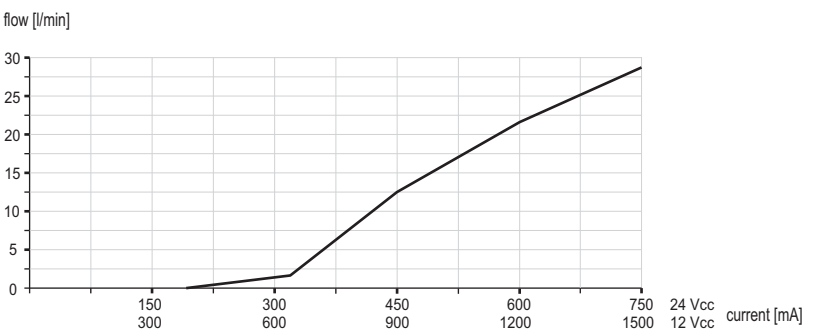

Proportional controlled electric valve

DATI TECNICI/*SPECIFICATIONS*	
pressione max in 1:2:3/*max pressure in 1:2:3*	300 Bar
portata max/*max flow*	30 L/min
viscosità/*oil viscosity/fluido/fluid*	vedi pag. 0.000.12
trafilamenti/*oil leakage*	250 cc/min
tensioni disponibili/*available voltage*	12-24 Vcc
corrente max 12 Vcc/*max current 12 Vcc*	1600mA
corrente max 24 Vcc/*max current 24 Vcc*	800mA
PWM	120 Hz
resistenza bobina a 20°C/*coil resistance 20°C*	12 Vcc:4,2Ω - 24 Vcc:13,8Ω
isteresi/*hysteresis*	5%
grado di protezione con connettore montato/ *protection index with standard connector*	IP 65
coppia serraggio cartuccia/*cartridge torque*	30 Nm
coppia serraggio ghiera/*torque ring nut*	4 Nm
peso (con bobina)/*weight (coil included)*	0,56 Kg

Max adjustable flow

30 l/min - *7.92 gpm US*

35 Top inlet port with adjustable priority flow inside

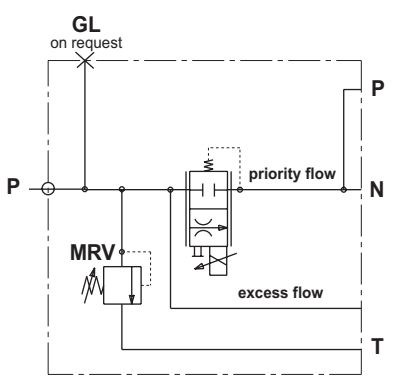

36 Top inlet port with adjstable priority flow outside

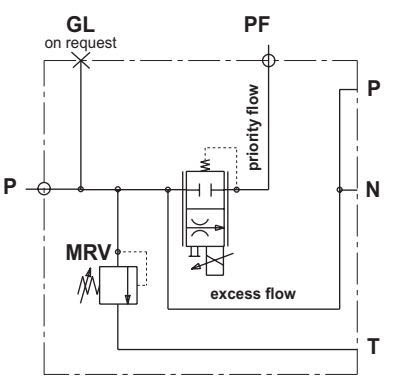

INLET MODULES

The back seal kit is the same of previous page

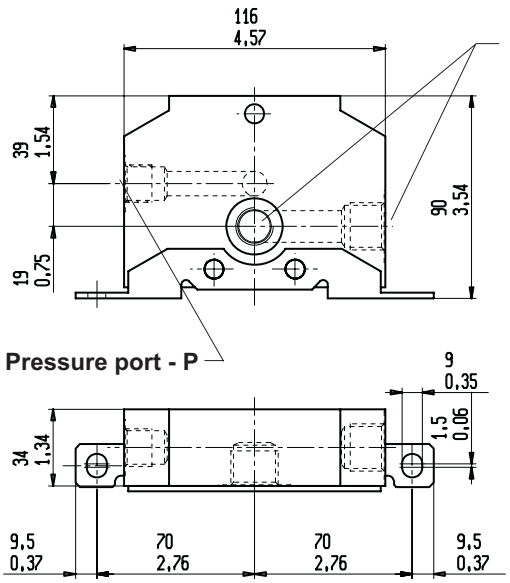

Inlet module to realize parallel circuit between two different directional control valves.It must be located on the upstream valve.

43

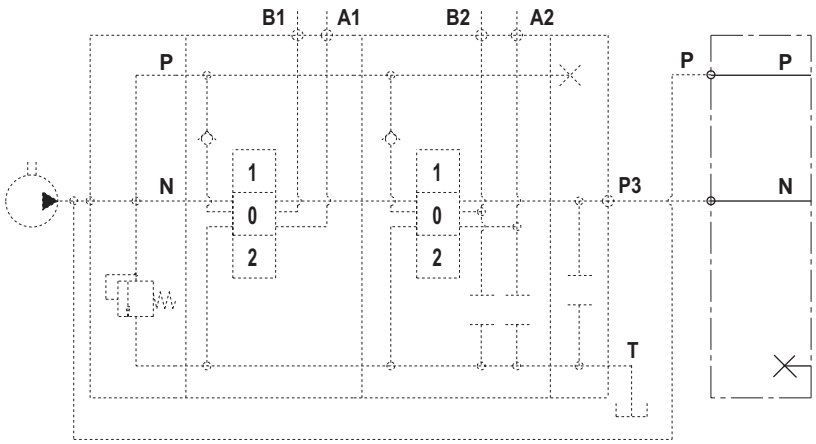

The back seal kit is the same of previous page

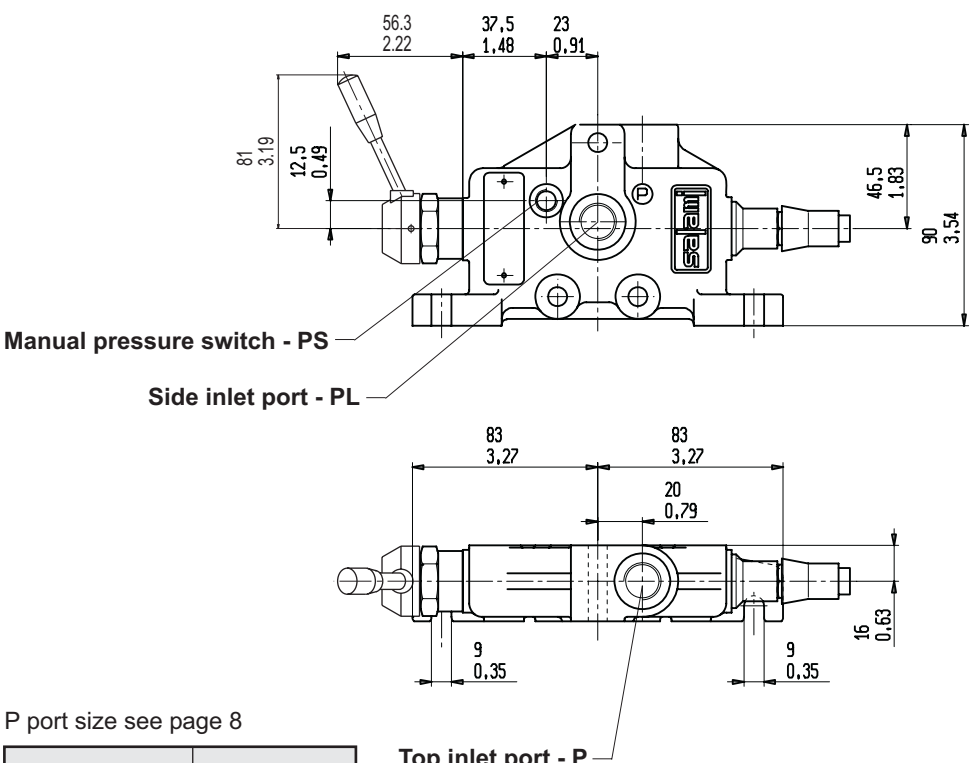

P port size see page 8

PORT SIZES	PS
BSP ISO 228	G 1/8
METRIC ISO 262	M 12 x 1.5
SAE ISO 176	SAE#2 5/16-24 UNF

Top inlet port with manual pressure switch on "B" side and main relief valve on "A" side (see drw. besides)

51

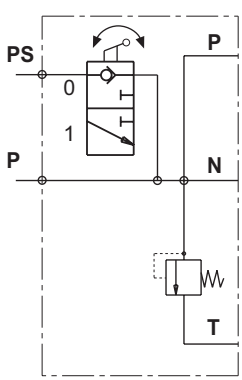

WORKING MODULE (PARALLEL CIRCUIT)

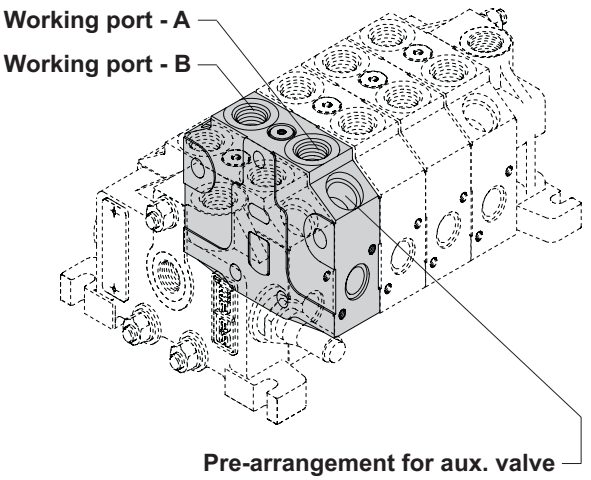

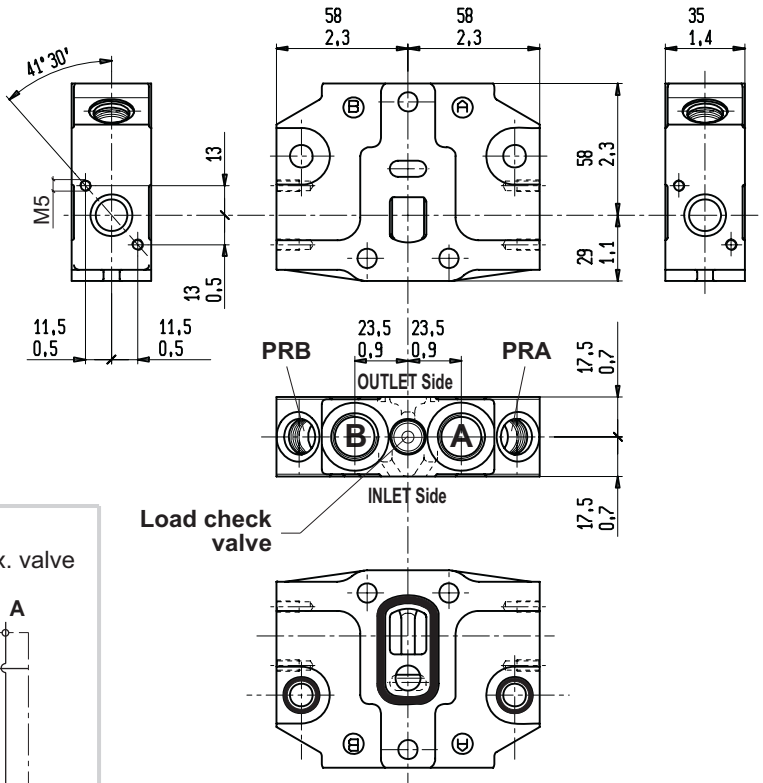

P

Parallel circuit
without auxiliary valve

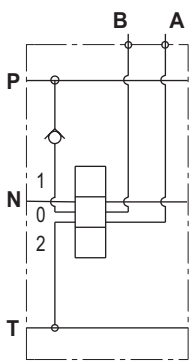

Parallel circuit
pre-arranged for aux. valve

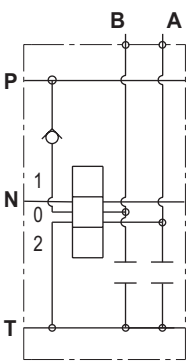

WORKING MODULE (SERIES CIRCUIT)

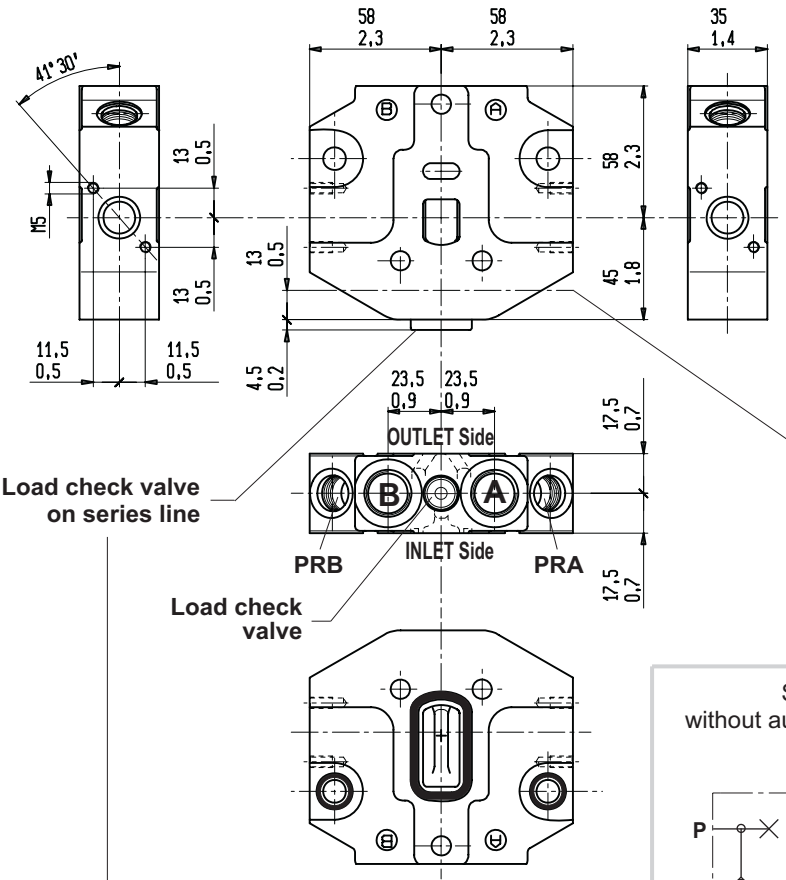

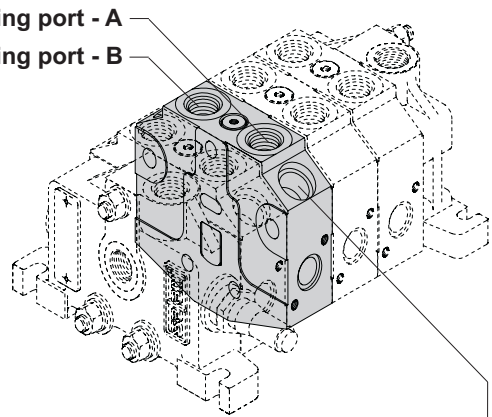

Load check valve on series line

Load check valve

Line of the valve support feet (on the inlet/outlet)

The series circuit working module is available with or without secondary load check valve on series gallery. **With spools commercial codes: 02 - 03 - 04 - 11 - 12, secondary load check valve on the series line is always necessary.**

S

Series circuit without auxiliary valve

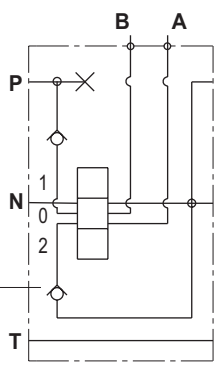

Series circuit pre-arranged for aux. valve

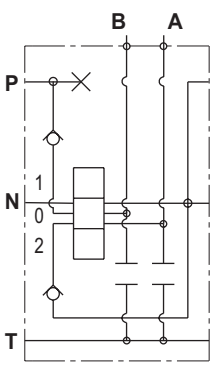

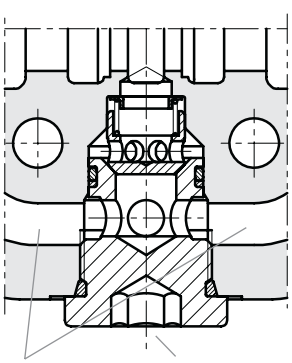

Series line

Allen wrench 8
tightening torque
30 Nm - 22 lbf.ft

WORKING MODULE (TANDEM CIRCUIT)

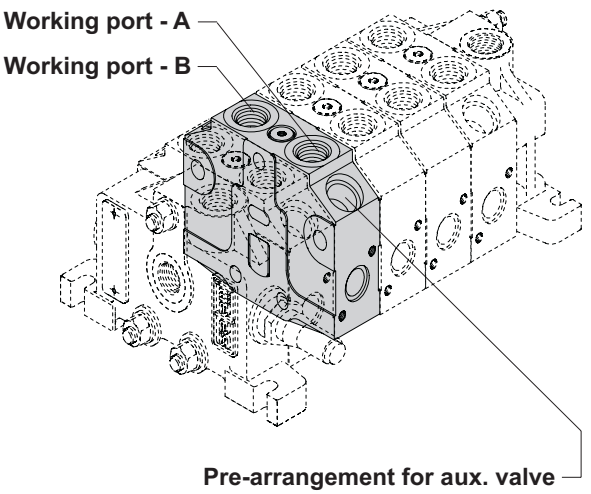

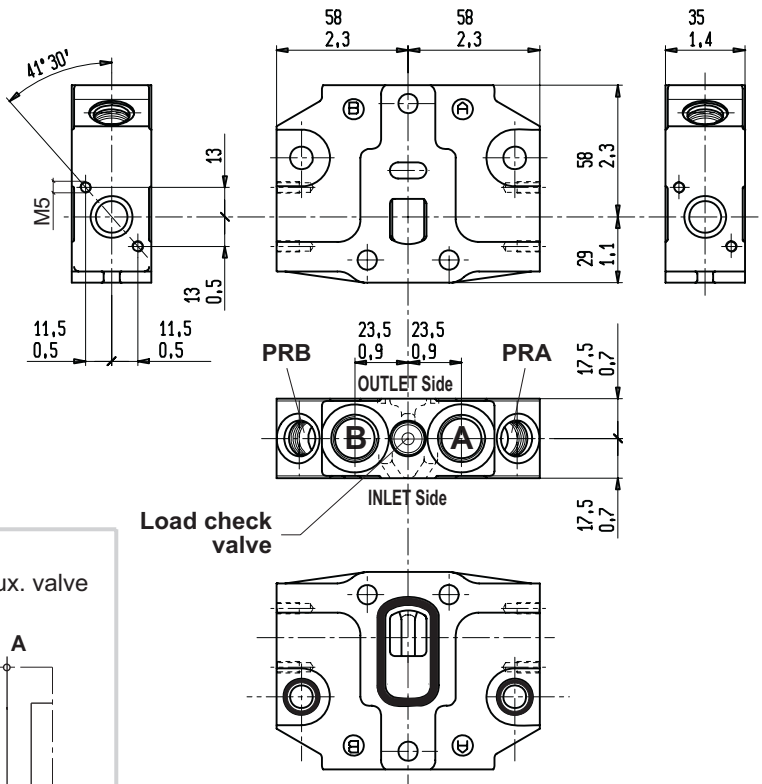

T

Tandem circuit without auxiliary valve

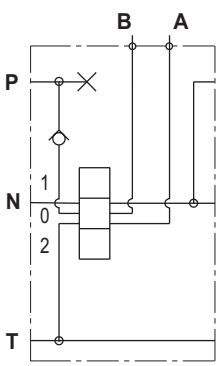

Tandem circuit pre-arranged for aux. valve

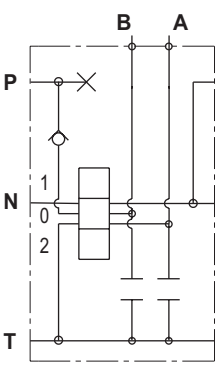

WORKING MODULES ASSEMBLING WITH INLET MODULE WITH PRIORITY FLOW VALVE

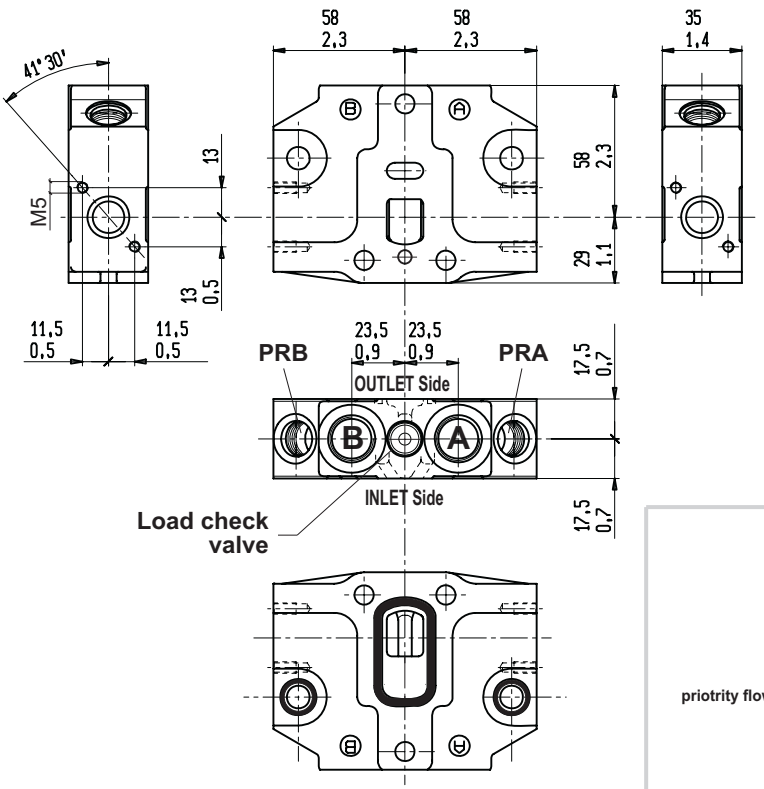

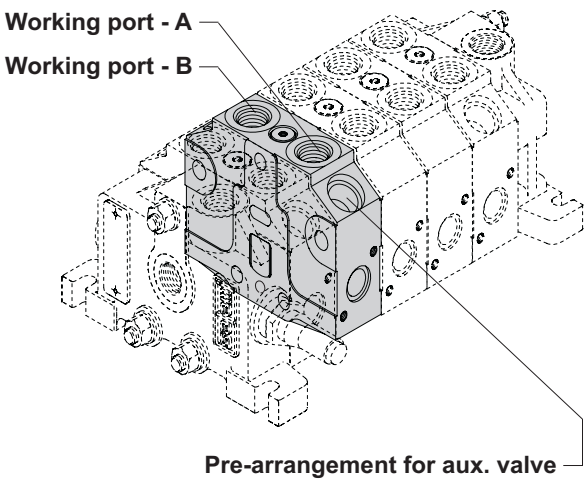

Dimensions are the same of drawing above

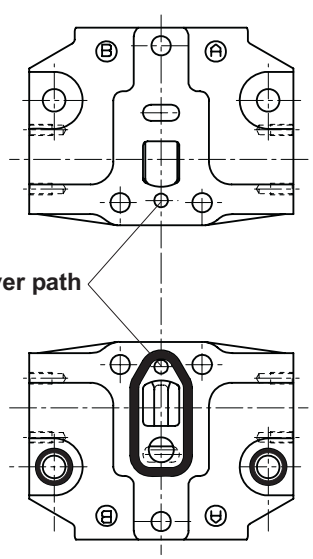

RT

Tandem circuit without auxiliary valve

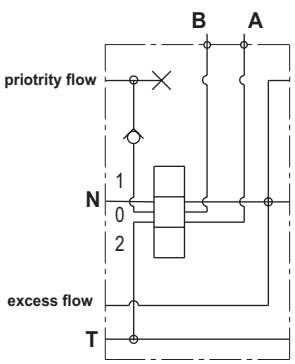

Tandem circuit pre-arranged for aux. valve

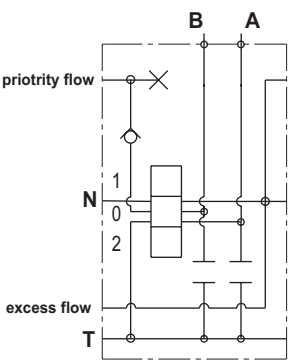

RP

Parallel circuit without auxiliary valve with excess flow crossover

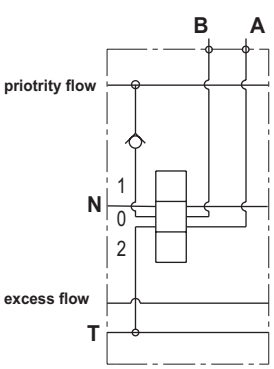

Parallel circuit pre-arranged for aux. valve with excess flow crossover

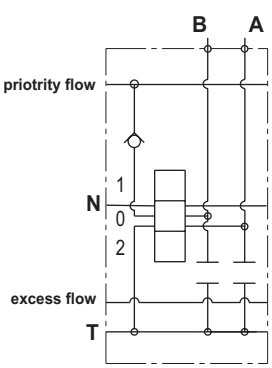

DOUBLE WORKING MODULE (PARALLEL CIRCUIT) WITH LOAD CHECK VALVE MECHANICAL OPERATED ON "B" PORTS

This double working module with parallel circuit is built with a special machining to insert a load check valve piloted with a mechanical device into "**B**" ports.When the spool is moved, a cam is pushed up by a tapered profile causing the starting opening of **VUM**.
This type of circuit is created for customers which need to control the load in position when the spool returns in position 0.Moreover the mechanical device to pilot the **VUM** guarantees a very good metering.
This working module can be pre-arranged for auxiliary valves on "**A**" ports.

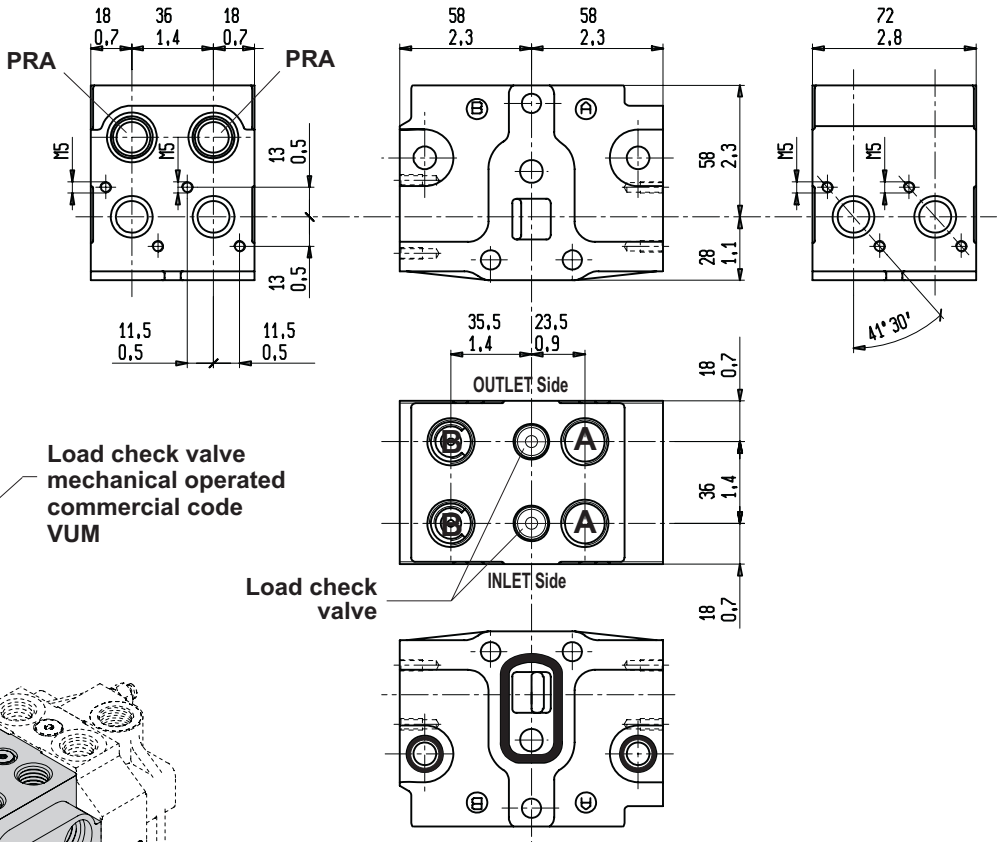

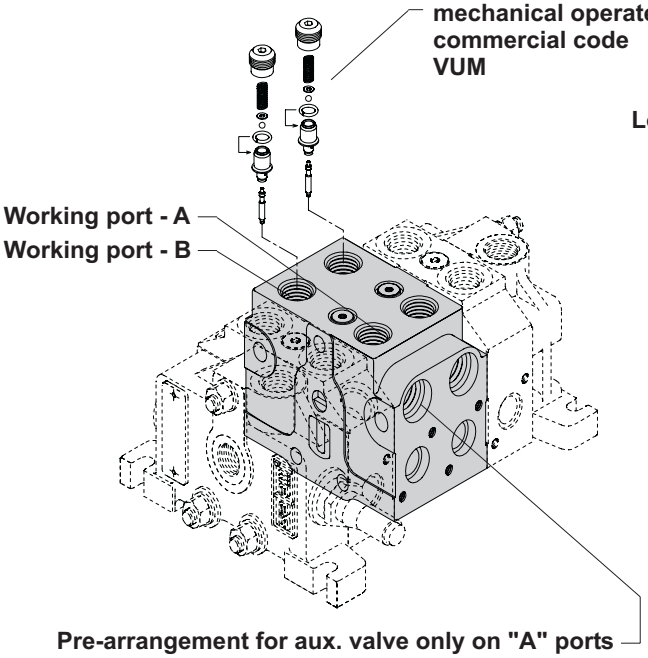

Auxiliary valves available are those from page 32 to page 34.

☞ In any case this double working module is a non-standard release.
For this reason in case you are interested you can contact our sales department and we suggest you to require an appropriate assembling and circuit drawing.

P

Parallel circuit
without auxiliary valve

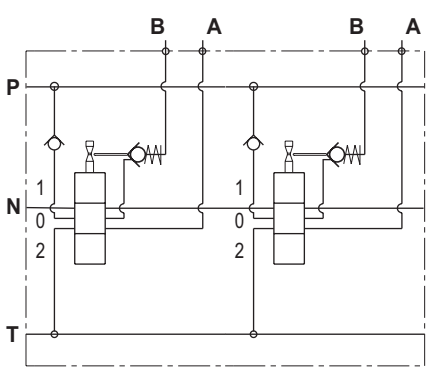

Parallel circuit
pre-arranged for aux. valves on "A" ports

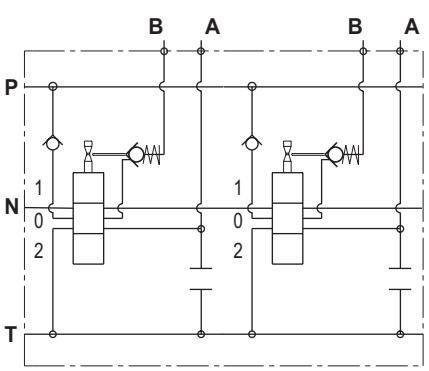

DOUBLE WORKING MODULE (TANDEM/PARALLEL CIRCUIT) WITH LOAD CHECK VALVE MECHANICAL OPERATED ON "B" PORTS

Assembling with inlet module with built-in priority flow valve (see page from 11 to 14)

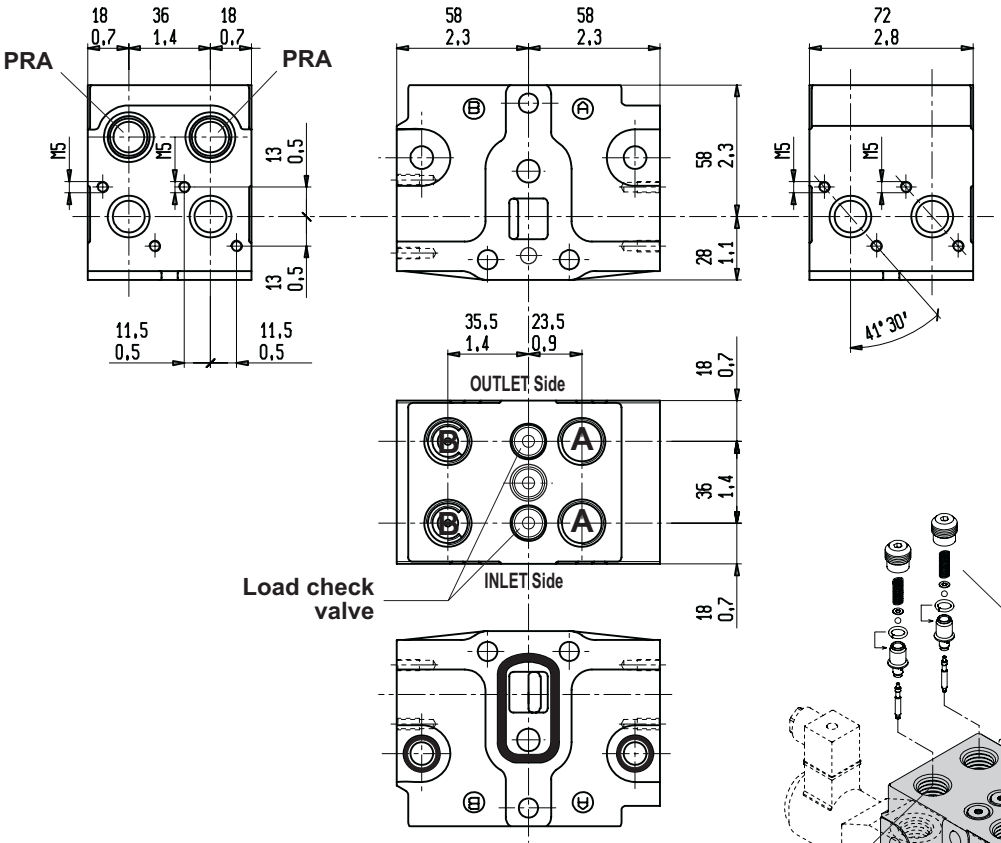

This double working module with first section tandem circuit and second parallel circuit is built with a special machining to insert a load check valve piloted with a mechanical device into "**B**" ports.When the spool is moved, a cam is pushed up by a tapered profile causing the starting opening of **VUM**.
This type of circuit is created for customers which need to control the load in position when the spool returns in position 0.Moreover the mechanical device to pilot the **VUM** guarantees a very good metering.
This working module can be pre-arranged for auxiliary valves on "**A**" ports.

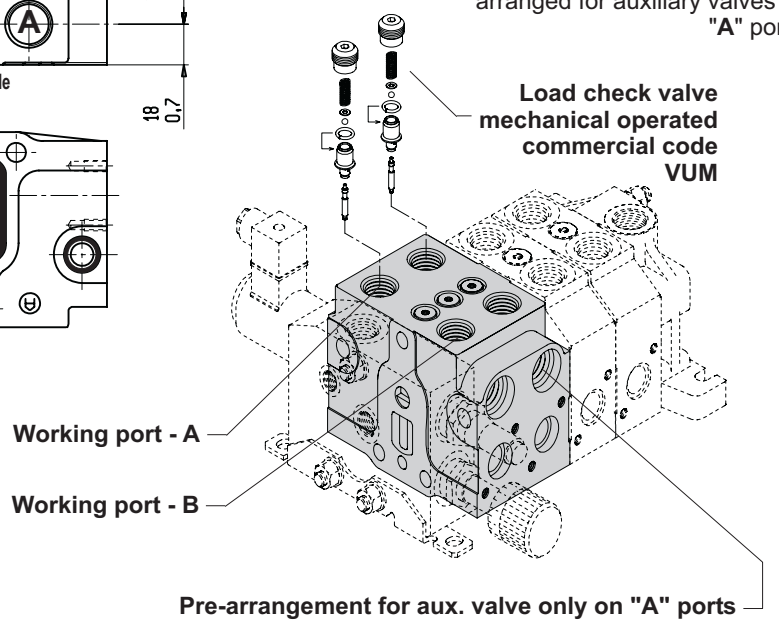

Auxiliary valves available are those from page 32 to page 34.

☞ In any case this double working module is a non-standard release.
For this reason in case you are interested you can contact our sales department and we suggest you to require an appropriate assembling and circuit drawing.

First section tandem circuit, second parallel circuit without auxiliary valve

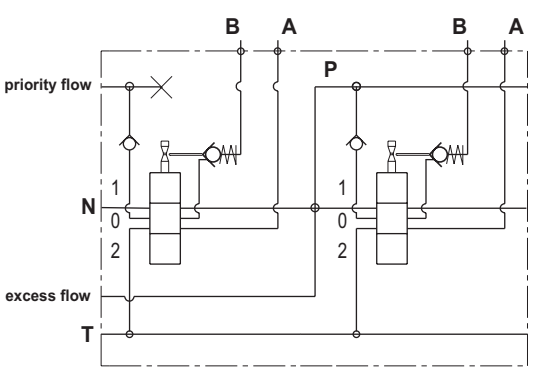

First section tandem circuit, second parallel circuit pre-arranged for aux. valves on "A" ports

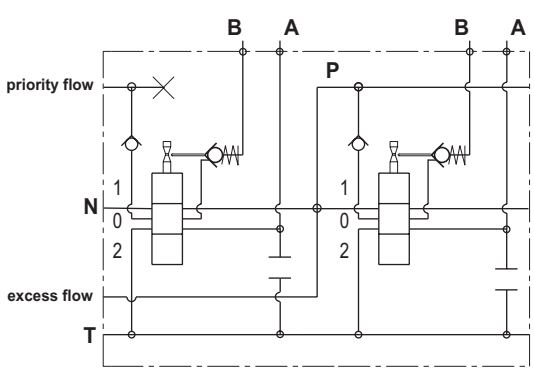

T

MID WORKING MODULE WITH ADJUSTABLE PRIORITY FLOW VALVE

Mid working module with priority flow valve is available only with priority flow which go to the upstream working module. With this type of mid inlet you must assemble the working module of page 19.

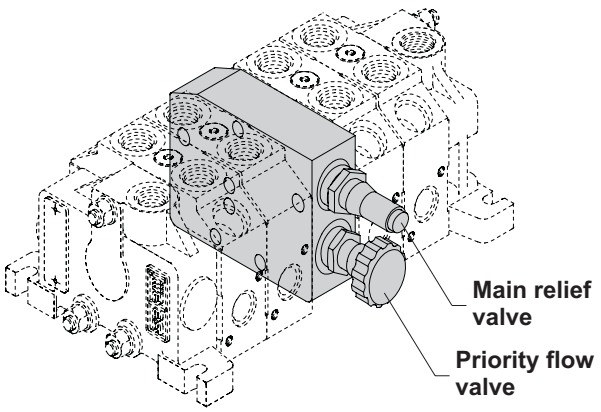

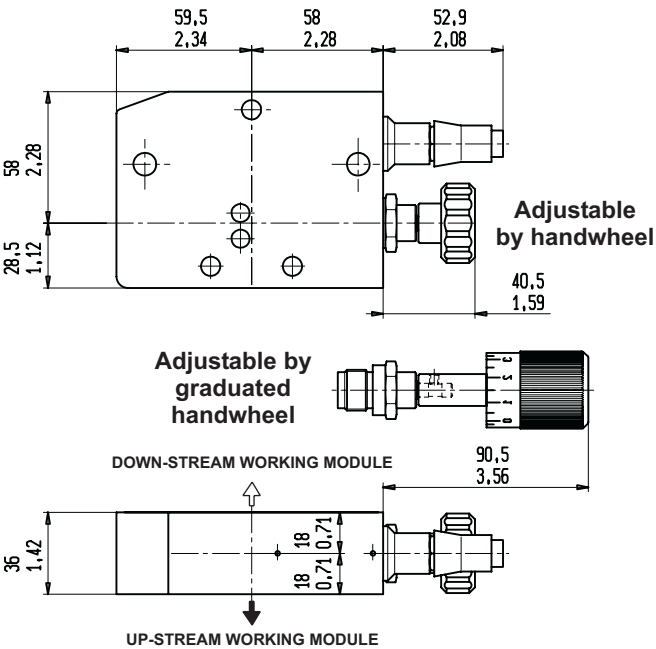

With this mid working module the priority and excess flows go always to the down-stream working module.
For this reason at the down-stream you must assemble the working module of page 19.
The p.f.v. is available with two kinds of regulation range depending of the valve register. Please specify register 1 or register 2 when you order.

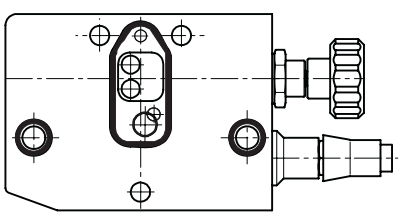

I5 Mid inlet with adjustable priority flow valve inside

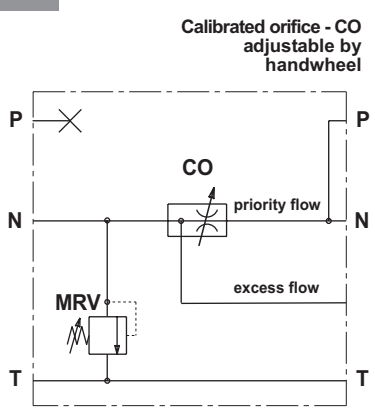

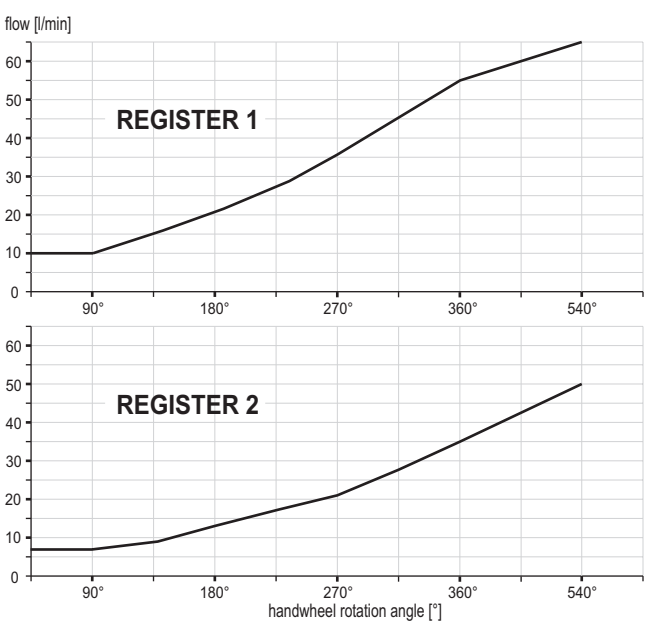

MID INLET MODULE WITH ADJUSTABLE PRIORITY FLOW VALVE

Mid inlet module with priority flow valve is available with priority flow which may go to the upstream working module or to the downstream working module, depending of assembling as shown in the drawing below. With this type of mid inlet you must assemble the working module of pages 16,17,18,20.

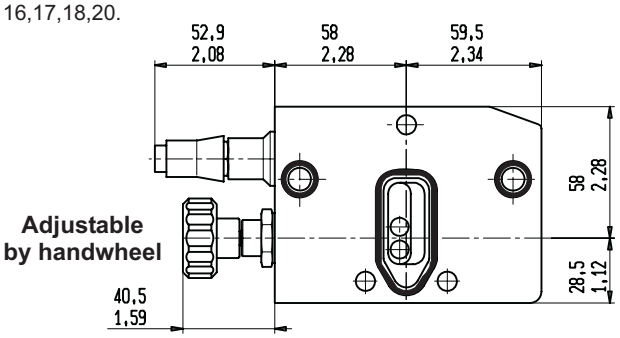

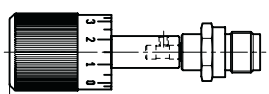

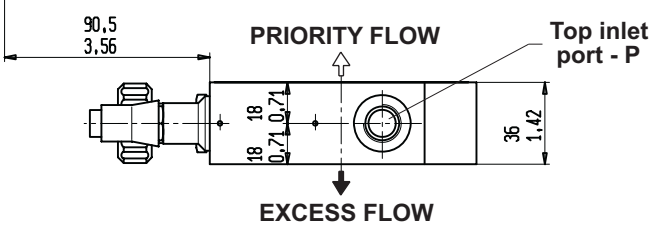

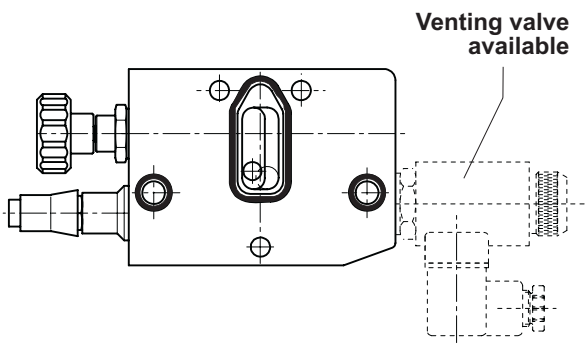

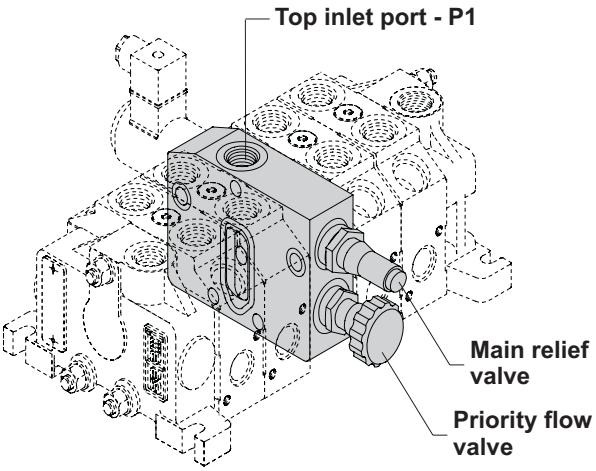

Just turning of 180° the mid inlet module you can decide where to manage the priority flow and the excess flow

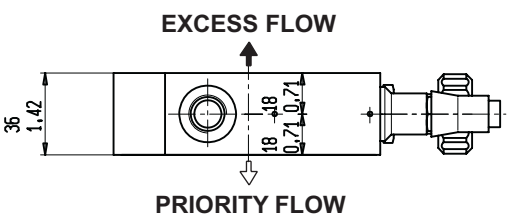

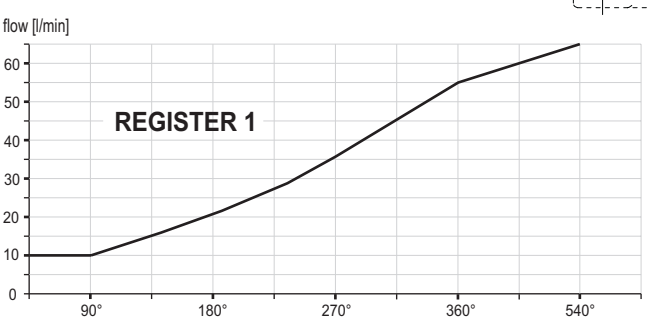

The p.f.v. is available with two kinds of regulation range depending of the valve register. Please specify register 1 or register 2 when you order.

Mid inlet with adjustable priority flow valve inside **I6**

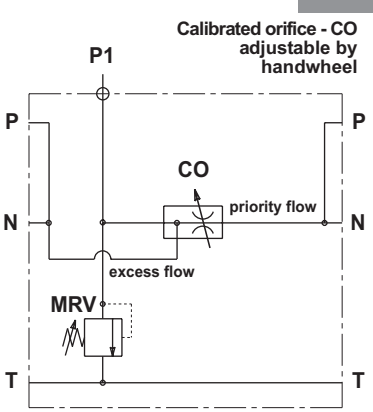

MID INLET MODULE (HYDRAULIC CIRCUITS)

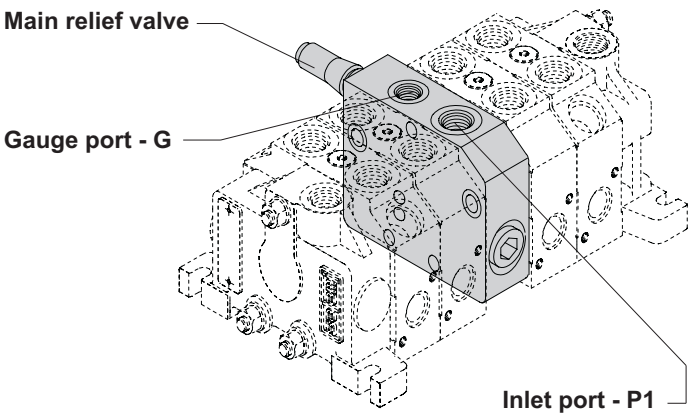

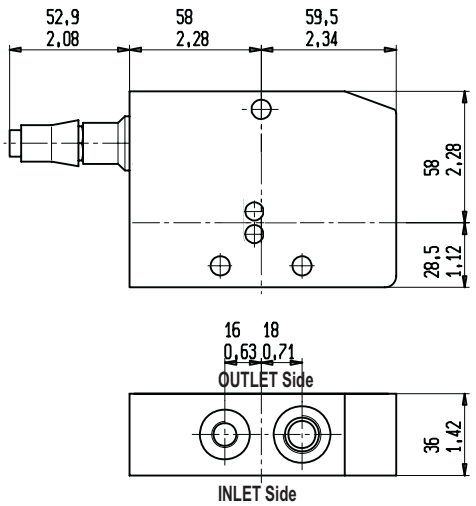

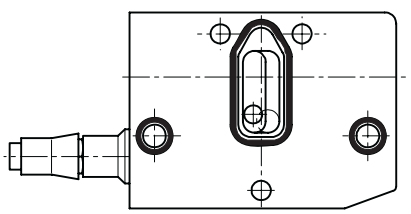

Gauge port is available with
the following threads:
BSP (ISO 228) - G 1/4
SAE UN-UNF (ISO725) - SAE 4

I1 Mid inlet for second pump with combining flows and main relief valve

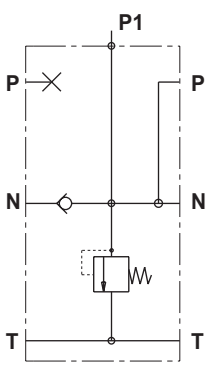

I2 Mid inlet for second pump with combining flows without main relief valve

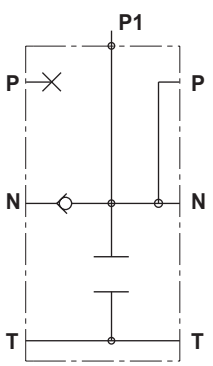

I3 Mid inlet for second pump with split flows and main relief valve

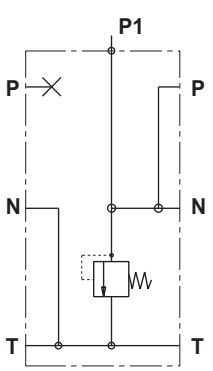

I4 Mid inlet for second pump with split flows and main relief valve + gauge port

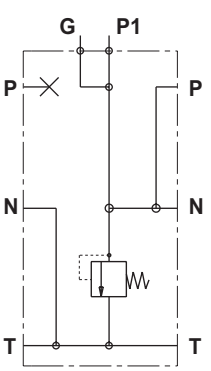

MID OUTLET MODULE (HYDRAULIC CIRCUITS)

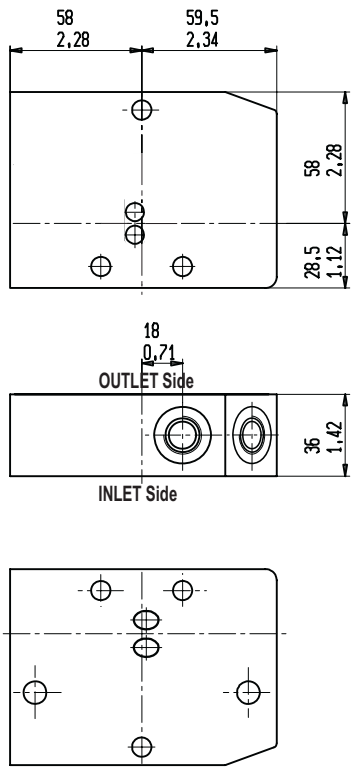

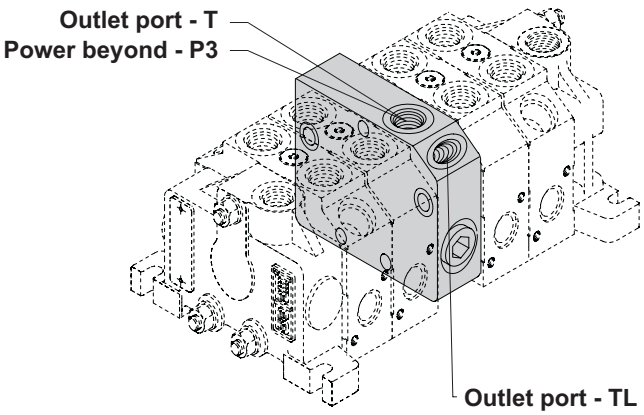

In case of commercial code **I9** the tank port is at tha top "T"
In case of commercial codes **I7** and **I8** the top port is for the power beyond "P3" and the tank port is at the side "TL"

Mid outlet **I7**

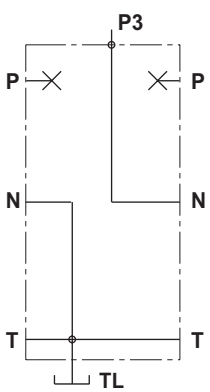

Mid outlet **I9**

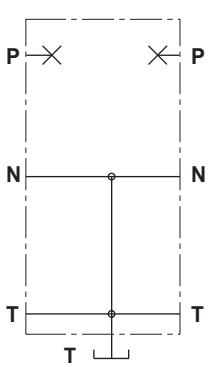

Mid outlet **I8**

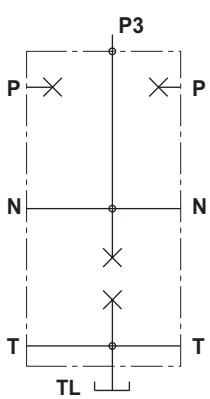

OUTLET MODULE (HYDRAULIC CIRCUITS)

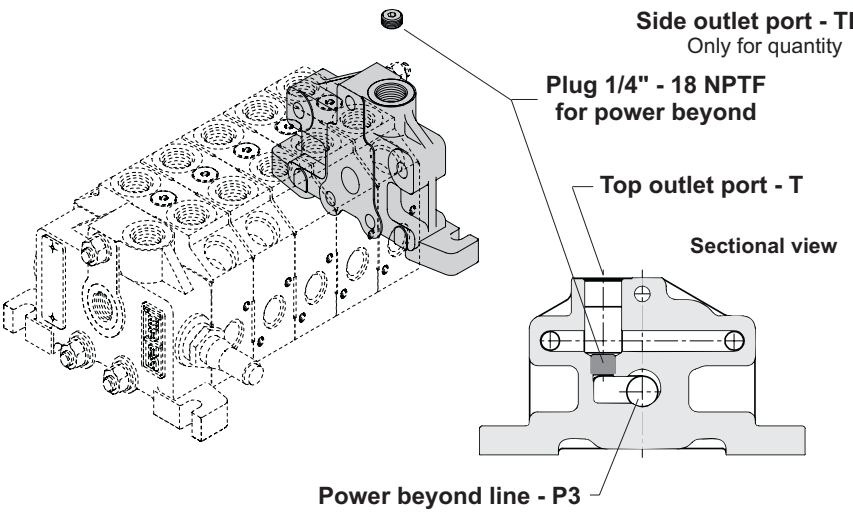

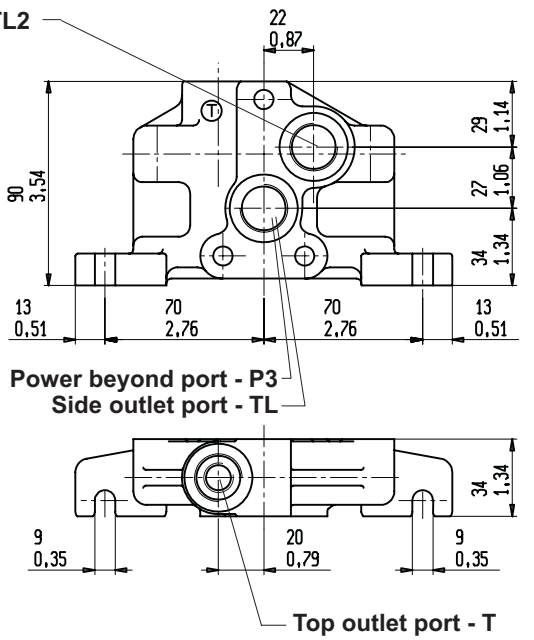

U1 Top port

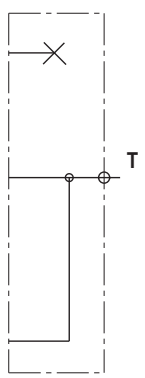

U2 Top and side ports

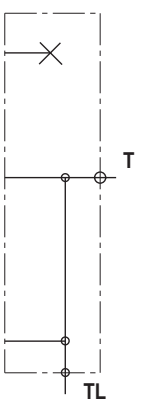

U3 Side port top port plugged

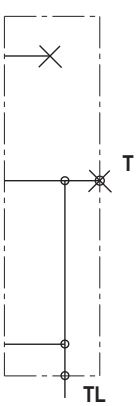

U4 Top port side port plugged

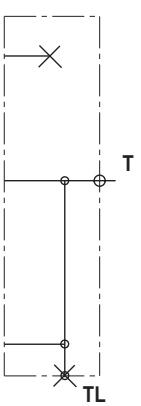

U5 Power beyond configuration (side P3)

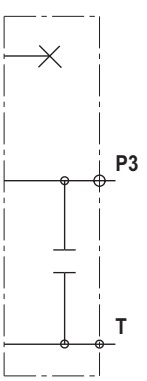

U7 Closed center circuit configuration

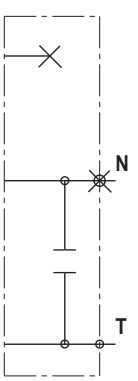

U8

Outlet type necessary for electro-hydraulic controls, please go to page 42 to see the drawing and hydraulic scheme.

ASSEMBLING TIE RODS

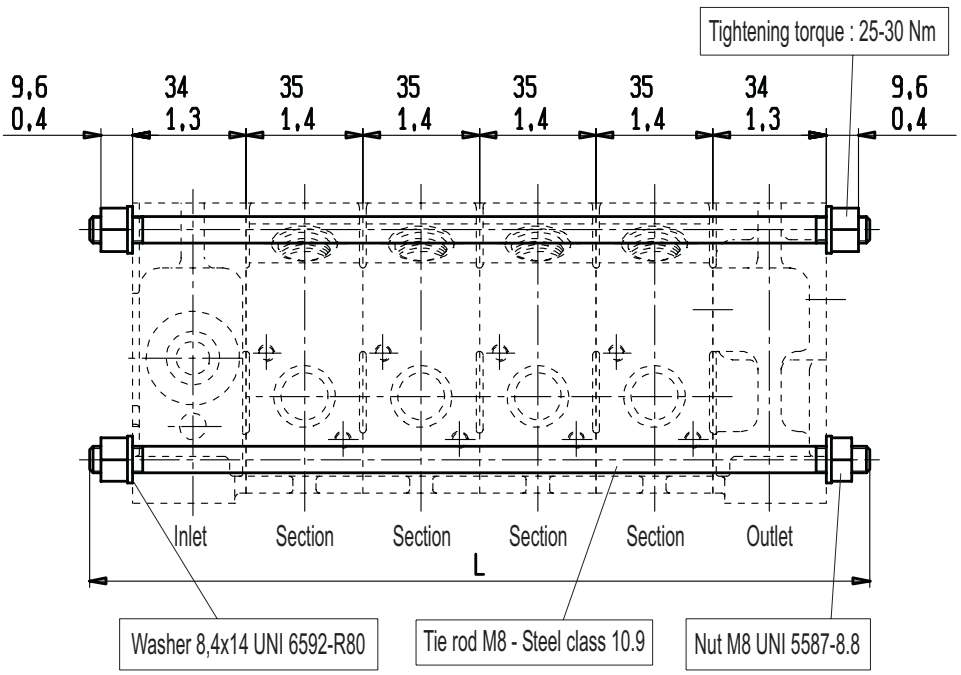

N° of sections	Length L
	mm. [inch]
1	128 [5.04]
2	162 [6.38]
3	198 [7.79]
4	235 [9.25]
5	271 [10.67]
6	305 [12.01]
7	343 [13.5]
8	377 [14.84]

Example of assembling of 6 working modules + inlet and outlet modules with tie-rods and side seal kits

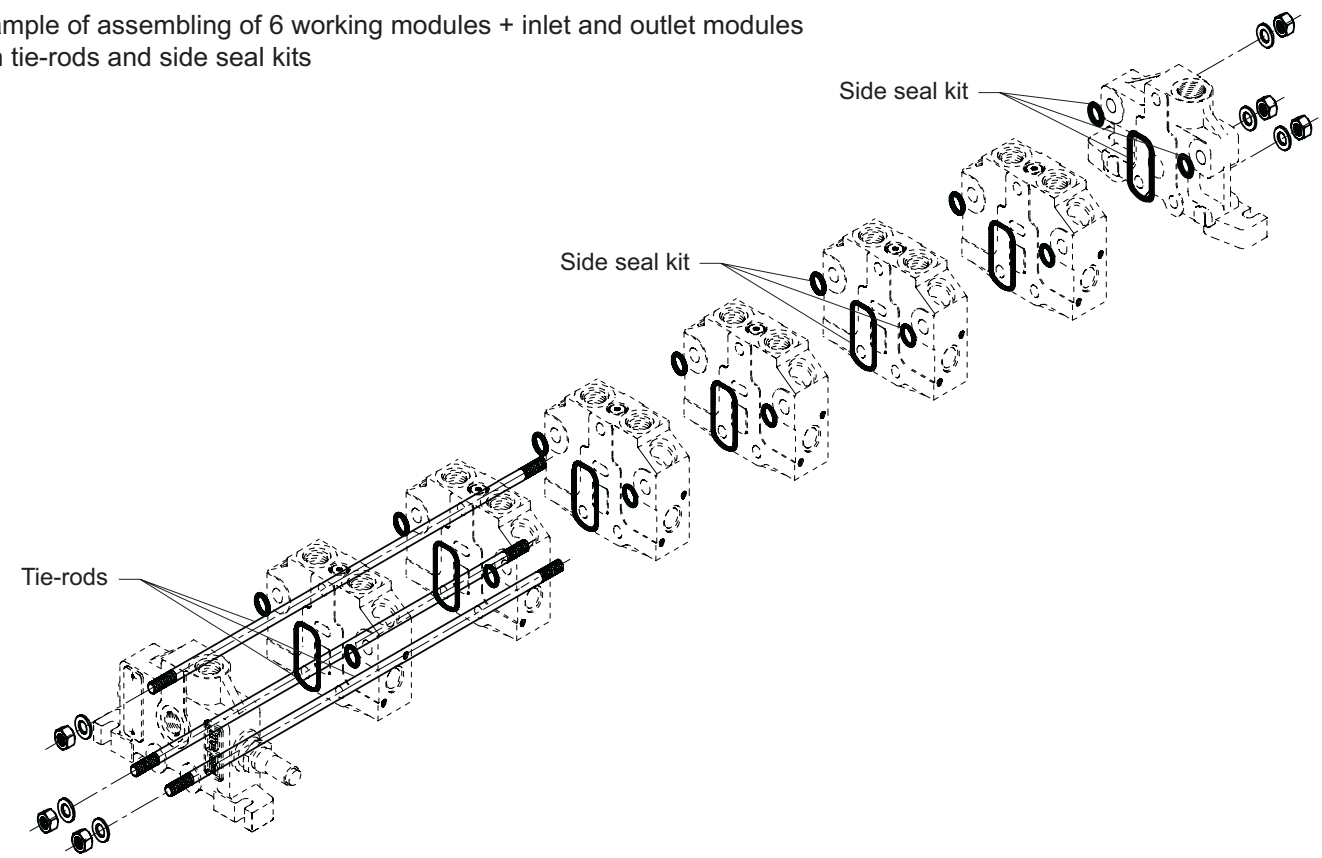

CIRCUIT AND SPOOL TYPES

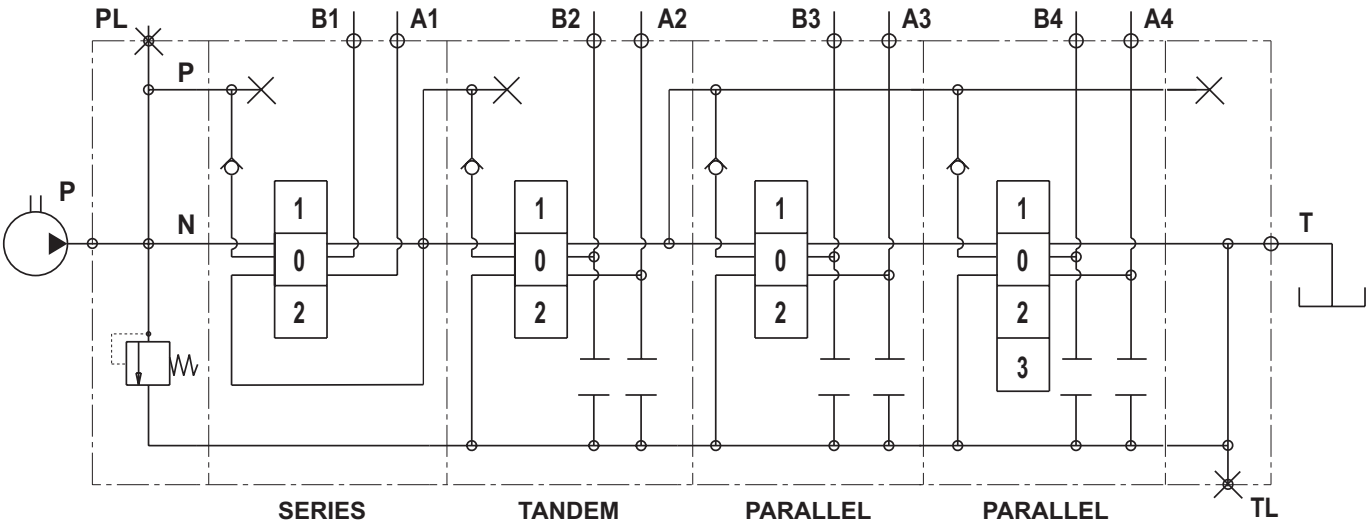

The circuits available are:
parallel type, series type, tandem type as shown in the picture above (tandem type for priority flow valve in the inlet module is available too, see page 19). You can have main relief valve or venting valve in the inlet(see page 11), the working sections can have pre-arrangement for auxiliary valves or not (you can mount venting valve too).
The spools can be 3 or 4 positions (as sown here below) moreover VD6A is available for power beyond just insert a plug 1/4" - 18 NPTF (see page 24).
As you can read at page 52, the spools can be types "A" nominal flow or "C" 2/3 of nominal flow.

01

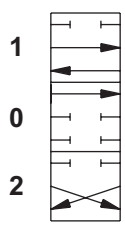

Double acting spool

Double acting motor spool

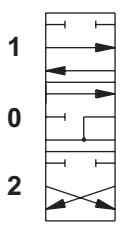

02

03

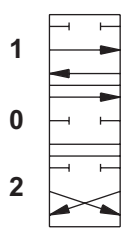

Double acting motor spool ("B" port blocked)

Double acting motor spool ("A" port blocked)

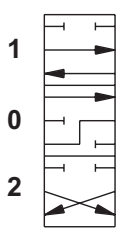

04

05

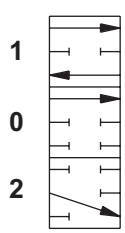

Single acting spool "A" working port

Single acting spool "B" working port

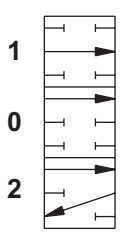

06

11

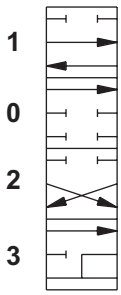

Double acting spool with float function in 3rd position (spool in)

12

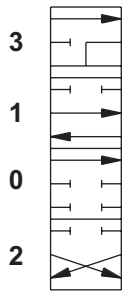

Double acting spool with float function in 3rd position (spool out)

13

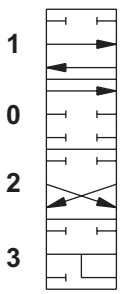

Double acting spool with regenerative function in 3rd position (spool in)

With this type of spool a special machining of the body is required

17

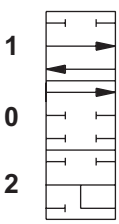

Double acting spool with regenerative function in position 2 (spool in)

With this type of spool a special machining of the body is required

18

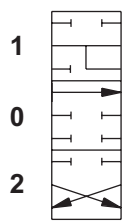

Double acting spool with regenerative function in position 1 (spool out)

With this type of spool a special machining of the body is required

52

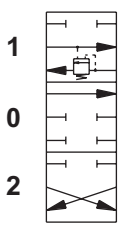

Over center double acting spool "A" working port

The stroke of this type of spool is ± 4.5 mm

53

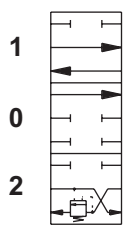

Over center double acting spool "B" working port

The stroke of this type of spool is ± 4.5 mm

54

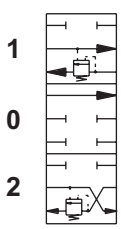

Over center double acting spool "A and B" working ports

The stroke of this type of spool is ± 4.5 mm

Salami standard spools have the ends as shown in this drawing. These ends spool are necessary to join it the controls and the positionings. With direct electric and hydraulic controls the ends spool are different as you can see at pages 39 and 40.

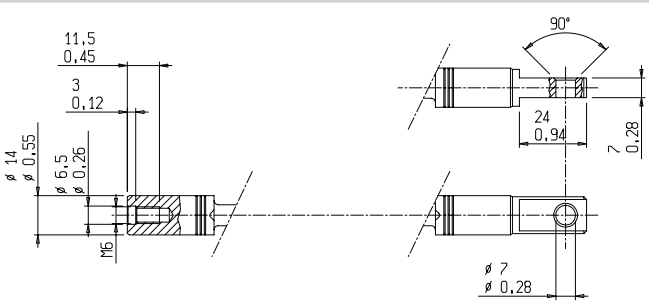

MAIN RELIEF VALVES

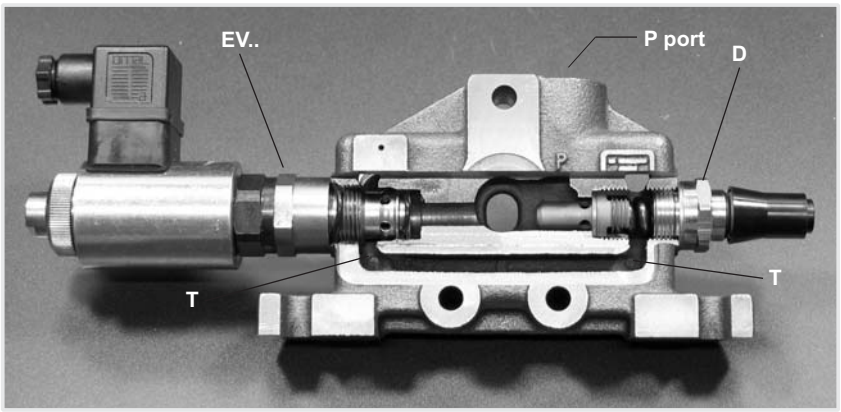

Max tightening torque:
wrench 10 - 18 Nm
wrench 13 - 24 Nm
wrench 22 - 35 Nm
wrench 24 - 30 Nm
wrench 26 - 30 Nm
wrench 27 - 30 Nm
Allen wrench 6 - 30 Nm
Allen wrench 8 - 30 Nm

The main relief valve can be mounted on "A" or "B" side, in case of venting valve this is at the opposite side of the main relief.All the testing values of this page have been obtained with nominal flow of 35 L/min - *9.25 gpm*, viscosity 16cST and oil temperature 50°C - *122°F.*

D

MAIN RELIEF VALVE DIRECT OPERATED
(setting range from 51 to 350 bar - *740 to 5100 psi*)
available in two type, see drawing here below

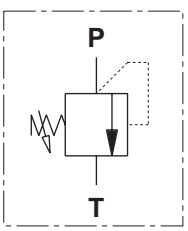

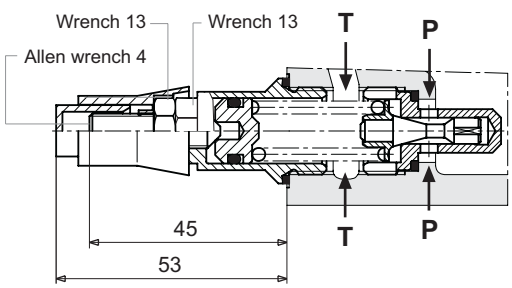

TYPE 1

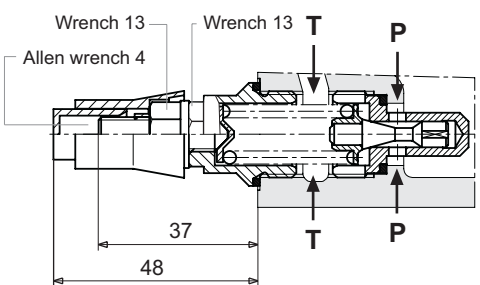

TYPE 2

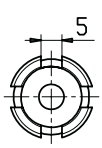

First part of the valve

The only difference between the two types is the type 1 is adjustable without oil leaking.

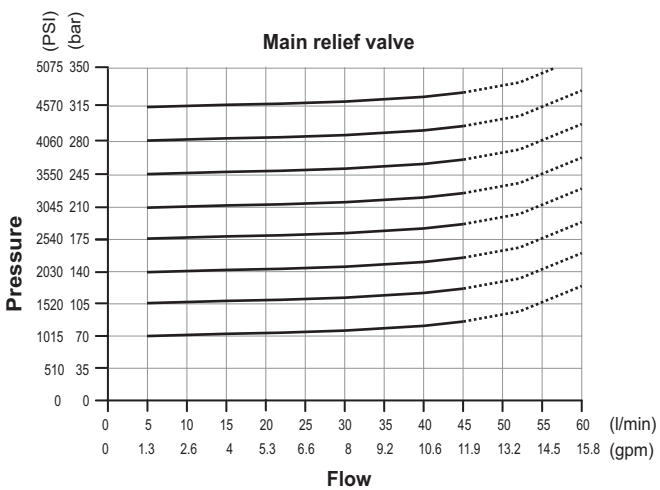

This valve is built as shown in the drawing here below:
washer - 1
first part - 2
shutter - 3
spring - 4
second part - 5
sealing plug - 6

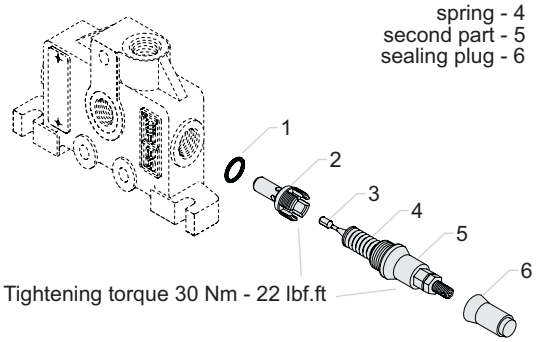

Tightening torque 30 Nm - 22 lbf.ft

W

PLUG FOR MAIN RELIEF SEAT
WITHOUT VALVE

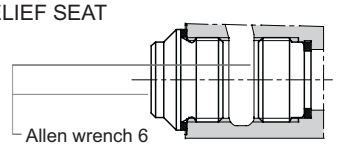

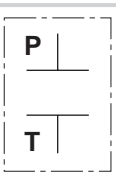

VENTING VALVES

This valve is located in a different cavity from main relief valve and at the opposite side or without main relief.
For all the test conditions, please refer you to page 28.

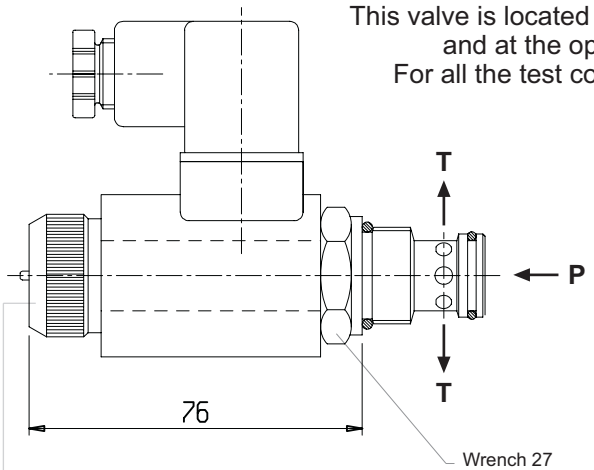

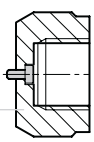

Unscrew the lock nut, inside there is a pin.

Push override

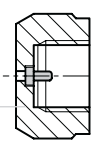

Turn the pin of 180° and screw the lock nut.
Tightening torque 4 Nm - 3 lbf.ft.

CONNECTOR
DIN 43650 - A/ISO 4400

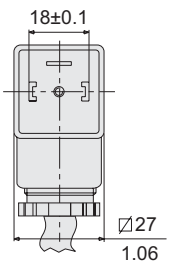

EV1

12 Vdc - Normally opened
Push override

EV2

24 Vdc - Normally opened
Push override

EV3

12 Vdc - Normally closed
Without override

EV4

24 Vdc - Normally closed
Without override

SPECIFICATIONS	
- MAX PRESSURE IN "P"	350 bar
- MAX FLOW	60 l/min
- OIL LEAKAGE-max pressure-46cST	0.25 cm^3/min
- AVAILABLE VOLTAGE	12 - 24 Vcc
- COIL RESISTANCE	12Vdc:8.7Ω - 24Vdc:33Ω
- COIL POWER	28 W
- PROTECTION INDEX WITH STANDARD CONNECTOR	IP 65

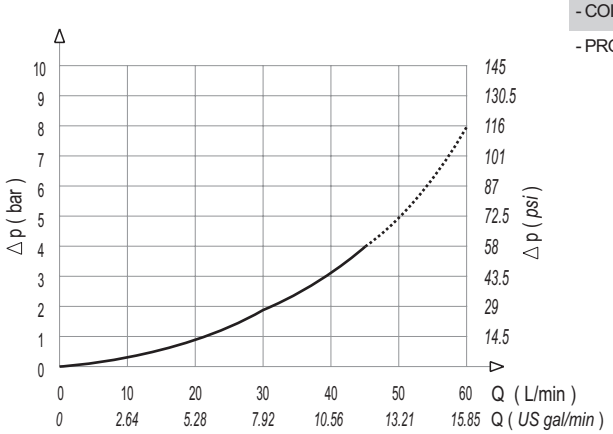

Normally opened

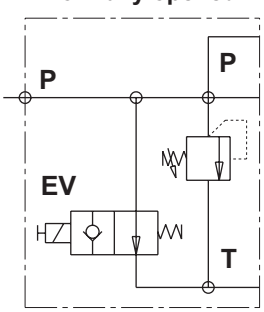

Normally closed

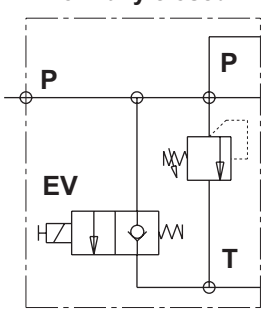

A available threads	
M10 x 1	SAE 6

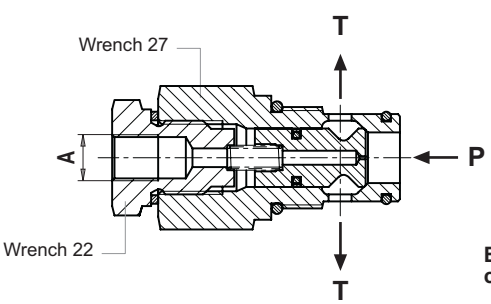

Normally opened

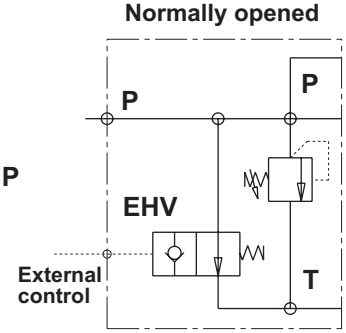

EHV

External hydraulic piloted venting valve

AUXILIARY VALVES

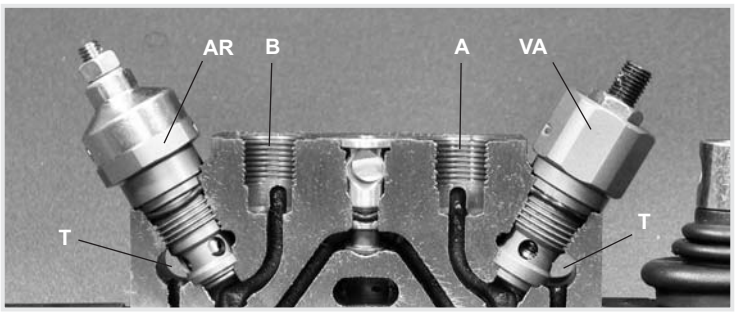

This picture shows the position of the auxiliary valves. For the tightening torque please see page 24.

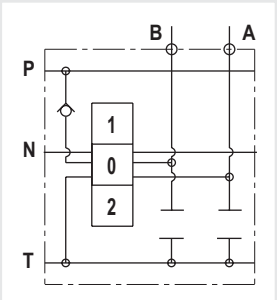

VA

OVERLOAD VALVE
(setting range from 50 to 275 bar - *725 to 4000 psi*)

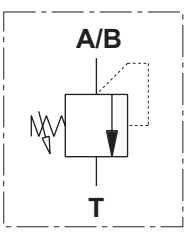

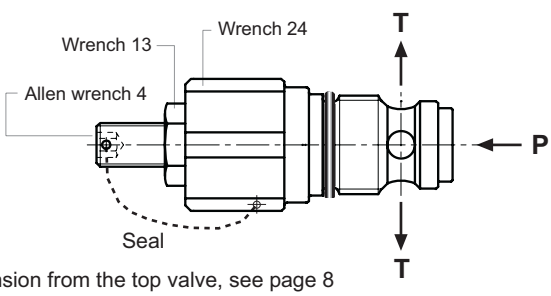

Dimension from the top valve, see page 8

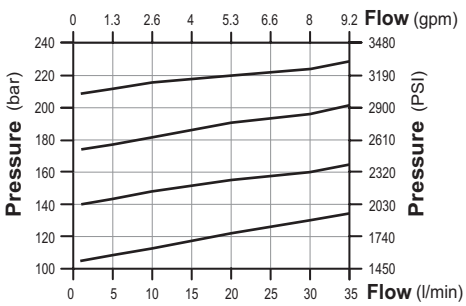

AR

OVERLOAD AND ANTI-CAVITATION VALVE
(setting range from 50 to 350 bar - *725 to 5075 psi*)

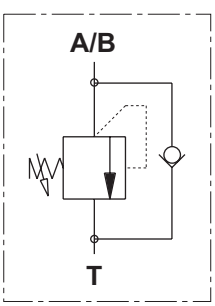

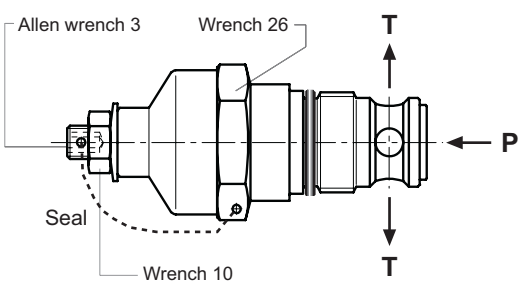

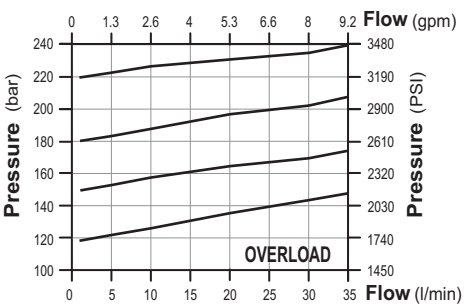

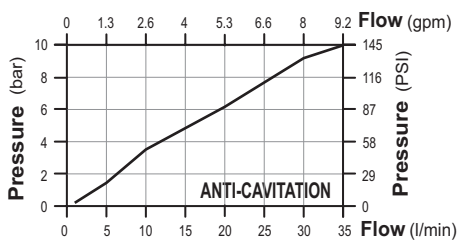

Both valves VA and AR are adjustable without oil leaking.
Further more, both have a security device to avoid valve sticking
Dimensions from the top valve, see page 8

VR

ANTI-CAVITATION VALVE

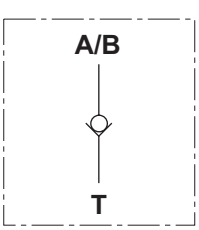

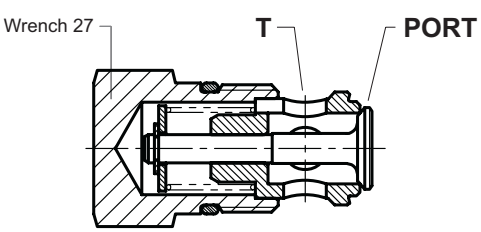

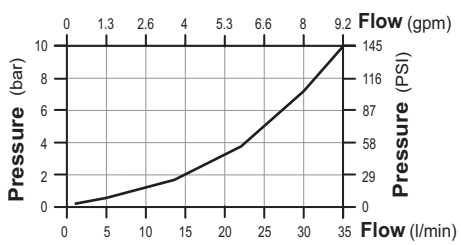

AUXILIARY VALVES

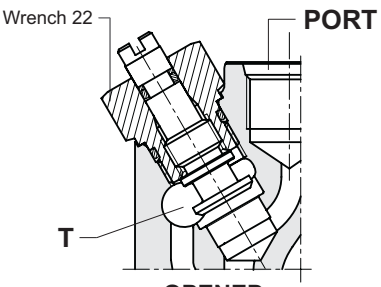

OPENED

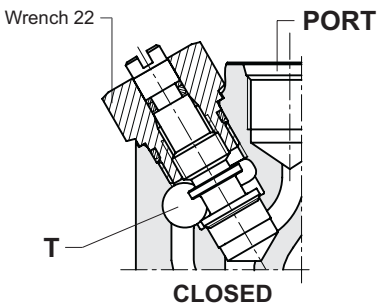

CLOSED

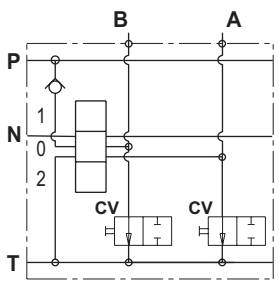

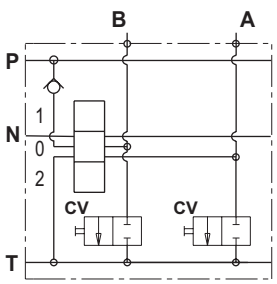

CV

CONVERSION VALVE

The conversion valve **CV** allows to obtain single acting function starting from double acting spool just connecting the port to tank.For example starting from a double acting spool to obtain a single acting "**A**" port function, we must open the **CV** valve sending "**B**" port to tank line.

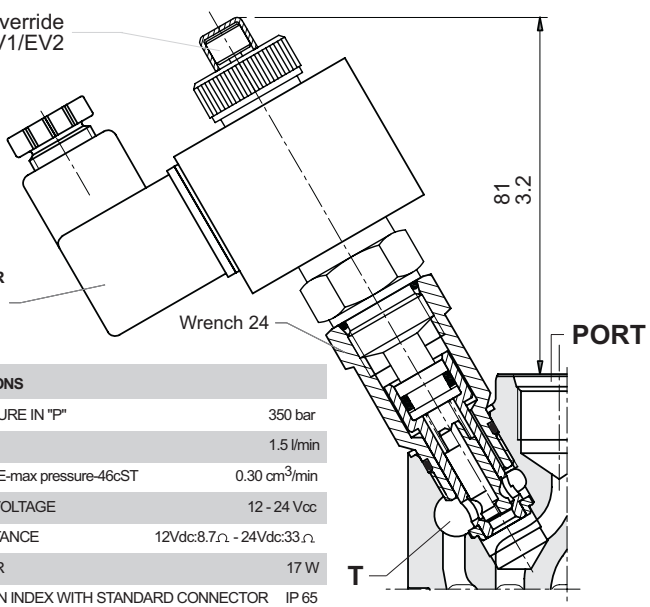

SPECIFICATIONS	
- MAX PRESSURE IN "P"	350 bar
- MAX FLOW	1.5 l/min
- OIL LEAKAGE-max pressure-46cST	0.30 cm^3/min
- AVAILABLE VOLTAGE	12 - 24 Vcc
- COIL RESISTANCE	12Vdc:8.7Ω - 24Vdc:33Ω
- COIL POWER	17 W
- PROTECTION INDEX WITH STANDARD CONNECTOR	IP 65

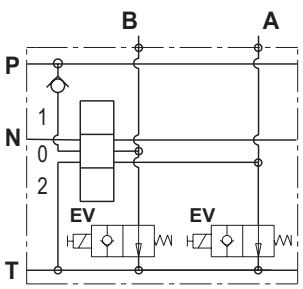

EV1

12 Vdc - Normally opened
Push override

EV2

24 Vdc - Normally opened
Push override

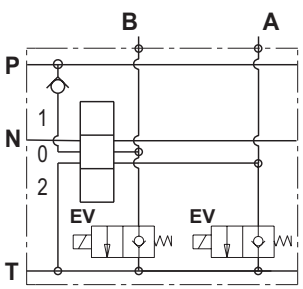

EV3

12 Vdc - Normally closed
Without override

EV4

24 Vdc - Normally closed
Without override

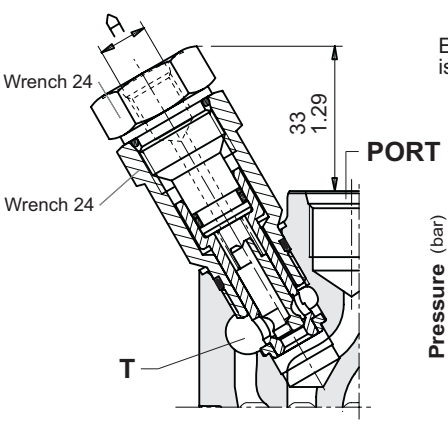

This performance data can be used for EV1,2,3,4 too.Because the solenoid valve is only a piloting device for the opening of the venting valve.

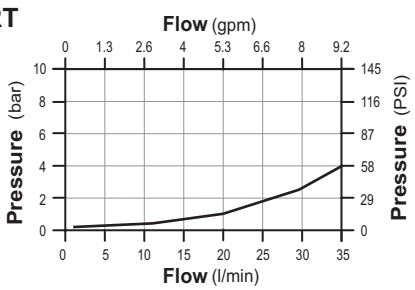

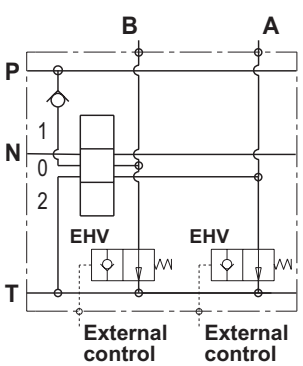

EHV

External piloted
venting valve

A	
available threads	
M10 x 1	SAE 6

OTHER VALVES

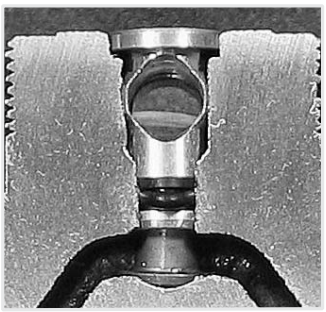

This is the load check valve VU which is built in every working module between ports and you need not to specify in phase of ordering because it is part of the module.
In the series circuit working module you can have a secondary load check valve on the series line as you can see in the drawing of page 17.

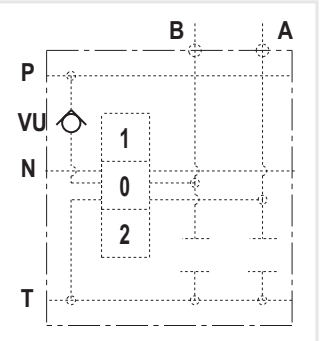

PR

PLUG FOR CAVITY

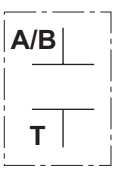

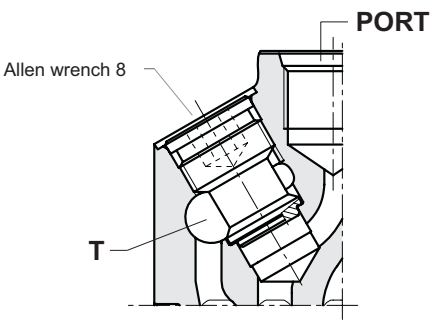

SP

Flow restrictor P ⟶ A/B

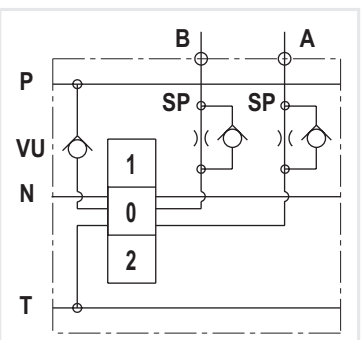

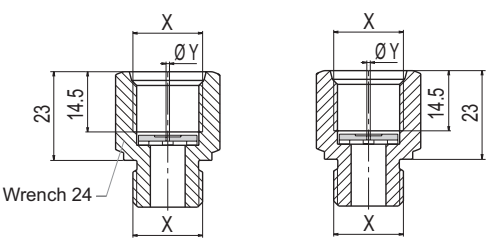

ST

Flow restrictor A/B ⟶ T

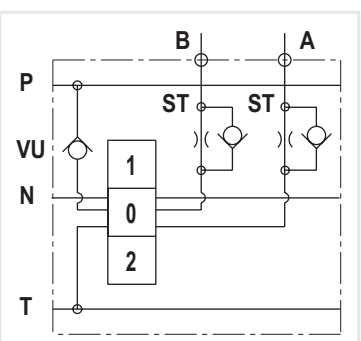

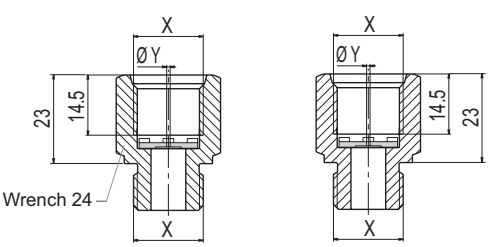

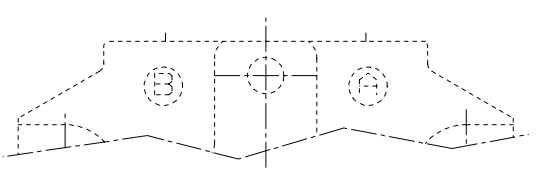

For tightening torque, please refer you to page 5.

X available threads			ϕ Y available measures		
*M18 x 1.5	SAE 8	G 3/8	ϕ 1.10	ϕ 1.25	ϕ 1.50

*Available for quantity, please contact our sales dept.

SPOOL CONTROLS AND SPOOL POSITIONINGS

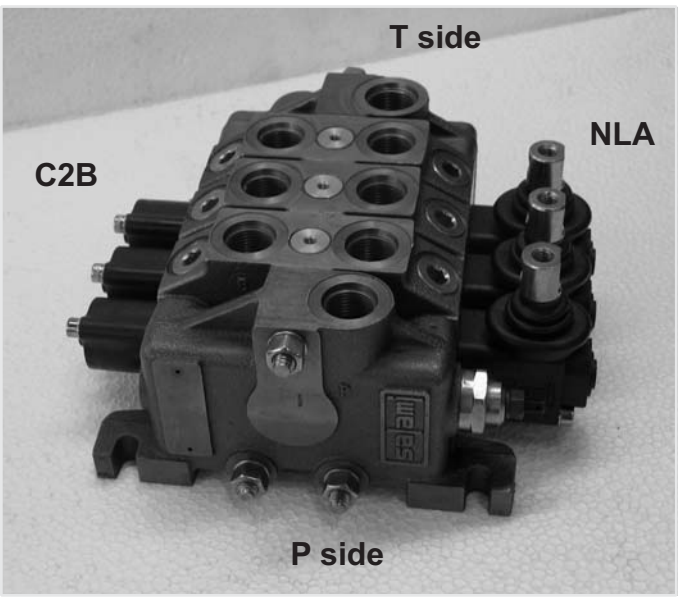

This picture shows the VD6A assembled, in this case you have a manual control "NL" on A side and a spring return in neutral position "C2" on B port side.In this case the manual control "NL" is used directly to have the spool movement, in other case, for example with electro-hydraulic control, there is only a safety lever. Considering that VD6A is a simmetrical valve, all spool controls and positionings can be placed on both sides A or B.In case of hydraulick kick-out or in case of spools types 13 - 17 - 18, you can also decide A or B port side but after that this is the final position because with this type of control and spools the working module have a special machining.

In this and following pages you can find all spool controls and spool positionings, they are all assembled with socket hexagon head screw or in some case hexagon head screw:
M5 x 0.8 with tightening torque of 4.5 ± 0.5 Nm.

The drw. here below show the reference to fix A and B side from the point of view of the operator.

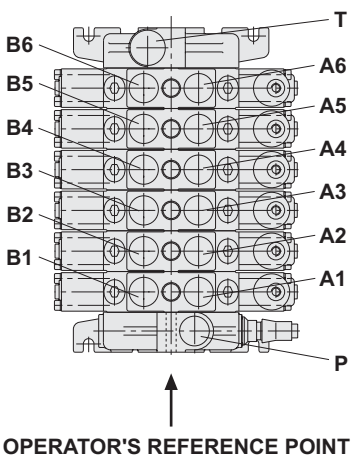

STANDARD SHAFTS

For different diameter and/or length, please get in touch with our sales dept.

Shaft with ergonomic knob
for cross lever L1/L2
R202 8996 0

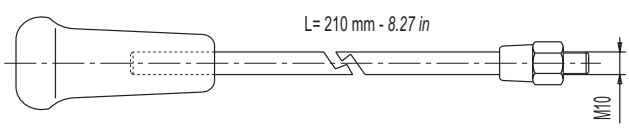

Shaft with threaded end
R202 9018 0

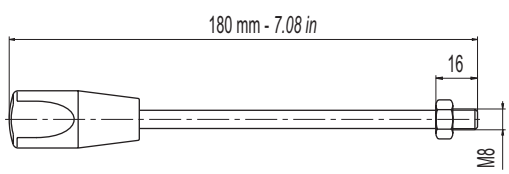

Shaft for clamp lever
R202 8839 0

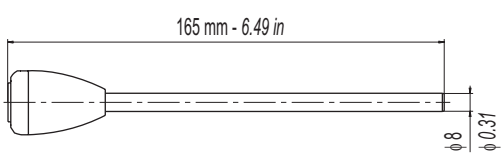

SPOOL CONTROLS

SL

Without lever box

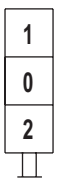

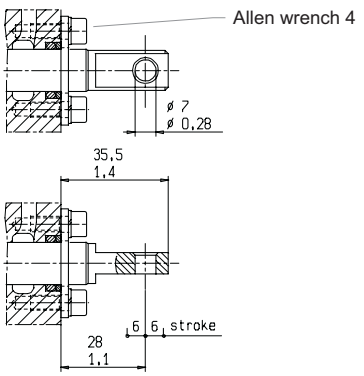

On request available with dust proof plate

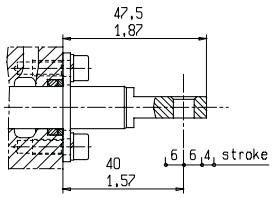

For spool with float position commercial code **12**

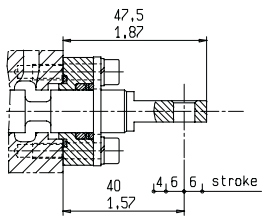

For spool with float position commercial code **11**

NL

Standard protected lever

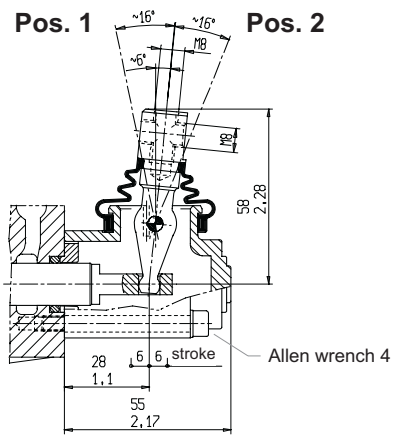

This lever can be assembled turned of 180°

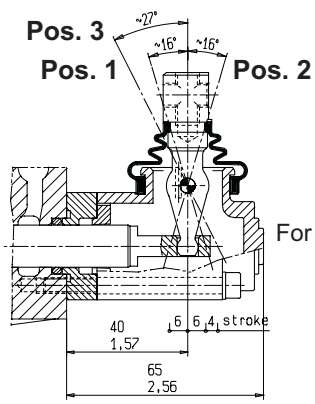

For spool with float position commercial code **12**

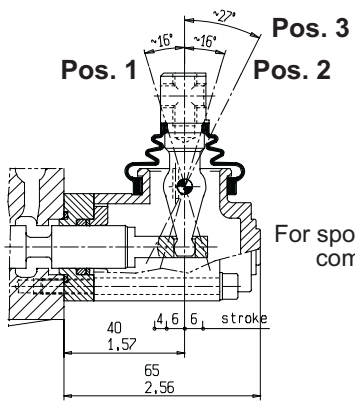

For spool with float position commercial code **11**

MP

Protected clamp lever

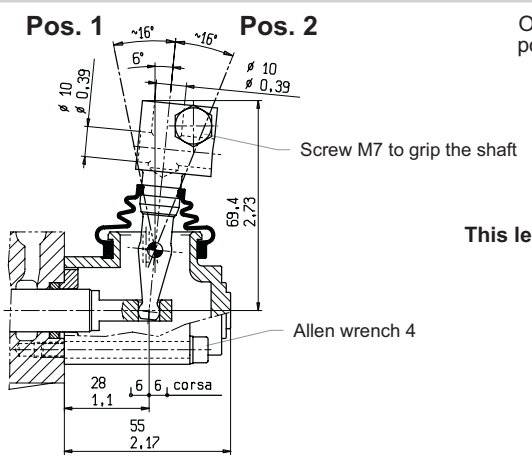

On request available for spools with float position: commercial codes 11 and 12 as shown in the drawing above

This lever can be assembled turned of 180°

PF

Not protected lever

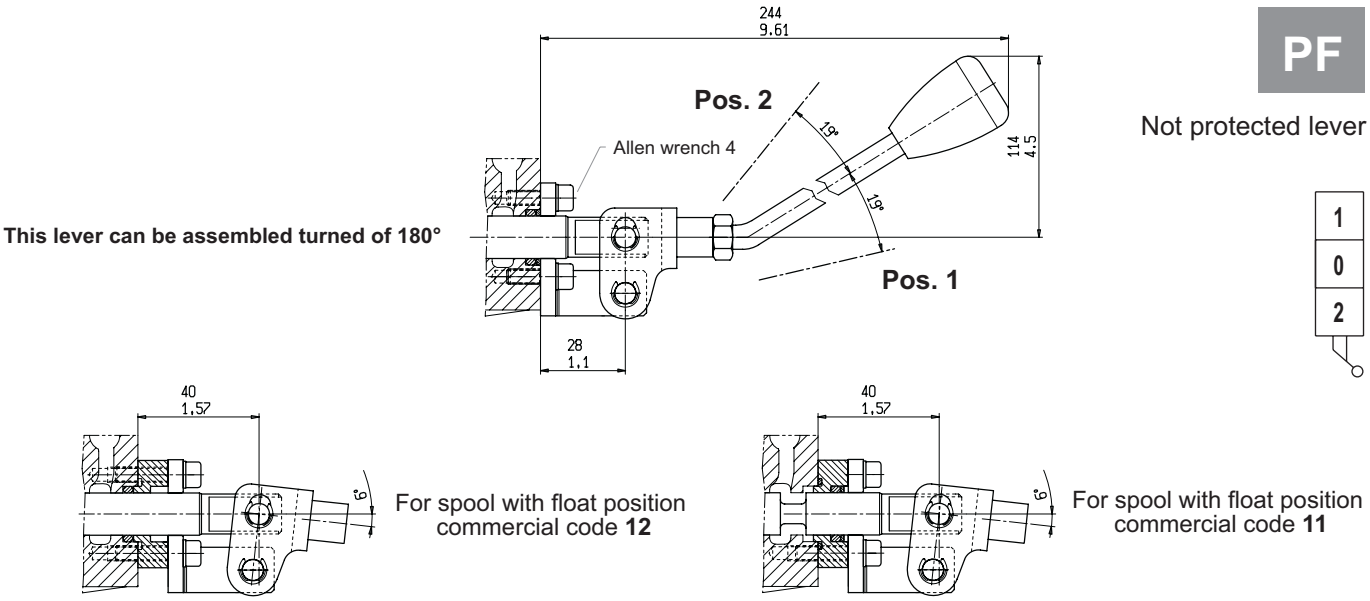

This lever can be assembled turned of 180°

For spool with float position commercial code **12**

For spool with float position commercial code **11**

L2

Cross lever for 2 spools fulcrum on down-stream spool

L1

Cross lever for 2 spools fulcrum on up-stream spool

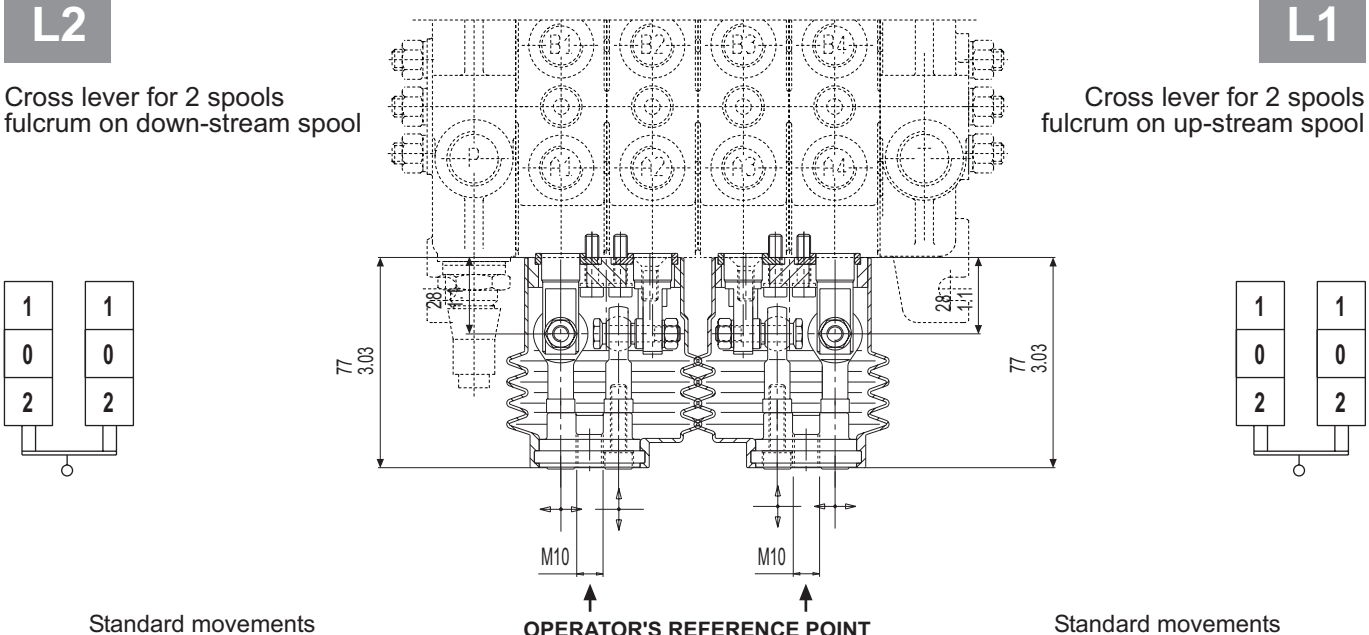

OPERATOR'S REFERENCE POINT

Standard movements from the operator's reference point

X movements direction from the operator's reference point

Standard movements from the operator's reference point

LX2

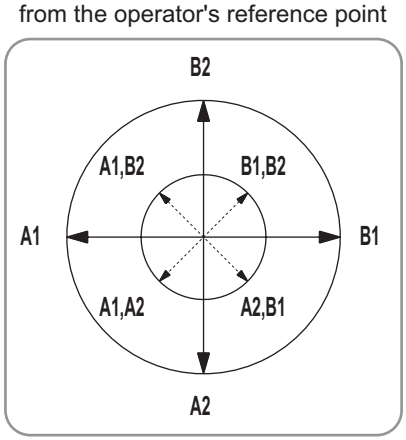

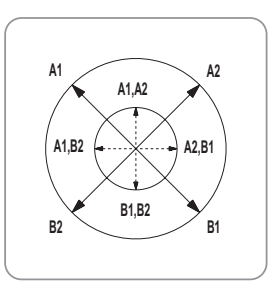

LX1

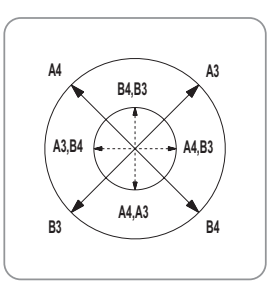

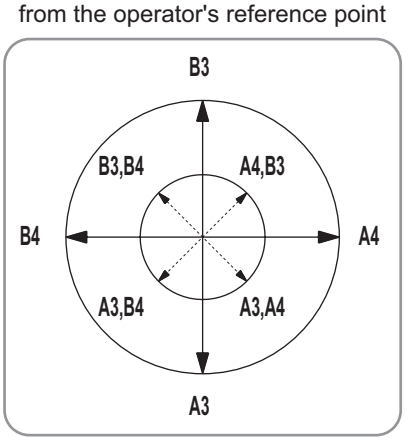

L4

Cross lever for 2 spools fulcrum and spool with (float-in) position on down-stream working module

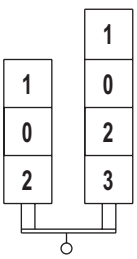

L3

Cross lever for 2 spools fulcrum and spool with (float-in) position on up-stream working module

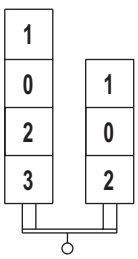

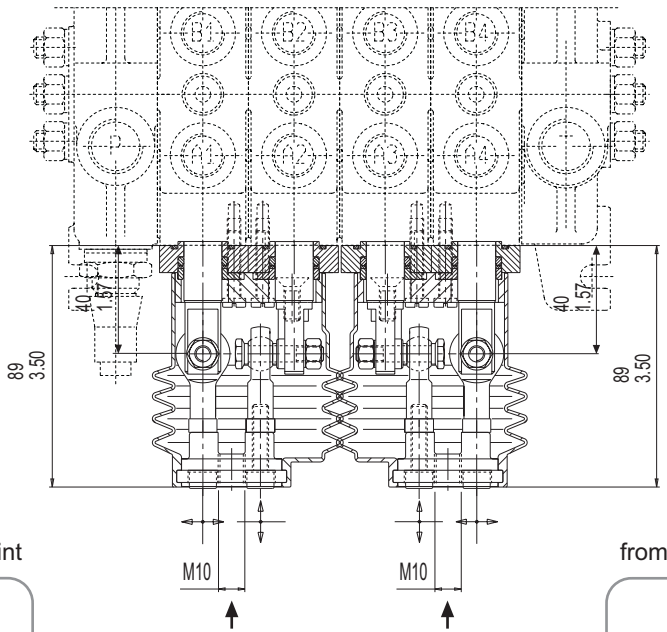

Standard movements from the operator's reference point

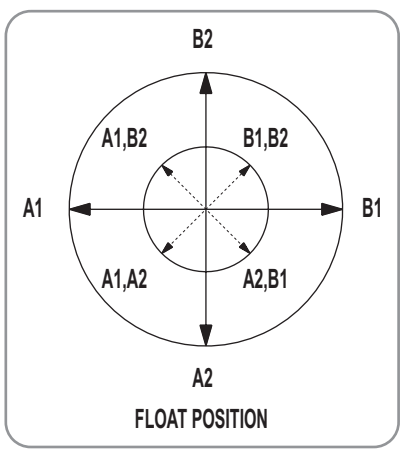

Standard movements from the operator's reference point

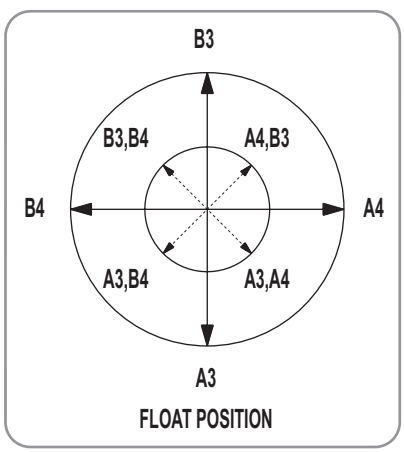

IMPORTANT

the double acting spool assembled with double acting + (float in) position is longer than a standard spool. In case you need joystick with double acting spool + (float out) position, please get in touch with our technical department.

TC

Devices for cable remote control .
For more details about cables, please consult our catalogue cable remote controls.

For spool with (float-in) and (float-out) positions commercial codes **11 - 12**

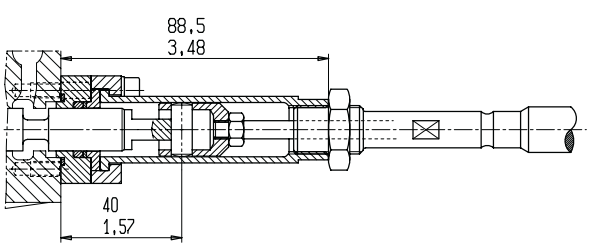

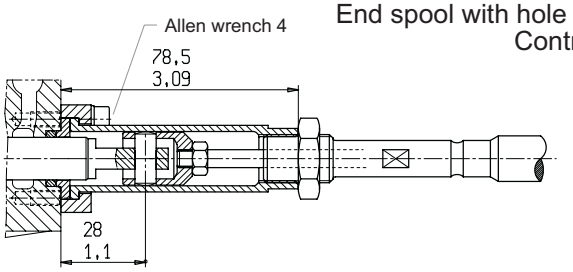

End spool with hole ϕ 7 mm.
Controls side

E7

Working conditions for this control:
Flows up to 30 l/min (8 *gpm*)
Pressure up to 190bar (2750*si*)

Electric push-pull control 3 positions
12 Vdc (coil power 31Watt at 20°C)

E8

Working conditions for this control:
Flows up to 30l/min (18*gpm*)
Pressure up to 2190ar (302750*i*)

Electric push-pull control 3 positions
24 Vdc (coil power 31 Watt at 20°C)

E9

Working conditions for this control:
Flows up to 40 l/min (10.6 *gpm*)
Pressure up to 210 bar (3050 *psi*)

Electric push-pull control 3 positions
12 Vdc (coil power 45 Watt at 20°C)

E10

Working conditions for this control:
Flows up to 40 l/min (10.6 *gpm*)
Pressure up to 210 bar (3050 *psi*)

Electric push-pull control 3 positions
24 Vdc (coil power 45 Watt at 20°C)

E11

Working conditions for this control:
Flows up to 50 l/min (13.2 *gpm*)
Pressure up to 210 bar (3050 *psi*)

Electric push-pull control 3 positions
12 Vdc (coil power 60 Watt at 20°C)

E12

Working conditions for this control:
Flows up to 50 l/min (13.2 *gpm*)
Pressure up to 210 bar (3050 *psi*)

Electric push-pull control 3 positions
24 Vdc (coil power 60 Watt at 20°C)

ELECTRIC DATA
- COIL POWER: 31 Watt at 20°C
- HEAVY DUTY 100%
- COIL POWER: 60 Watt at 20°C
- HEAVY DUTY 60%
- COIL POWER: 45 Watt at 20°C
- HEAVY DUTY 80%
- PROTECTION INDEX WITH CONNECTOR: IP 65

The available spools are from 01 to 06.
The working data aside are referred to the working conditions of page 3.

SL

Without lever for electric push-pull control with override device

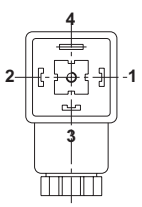

CONNECTOR
DIN 43650 - A/ISO 4400

To avoid an excessive wearing of the contacts, depending on the sparking of these parts, we suggest a suitable protection(for example diodes)

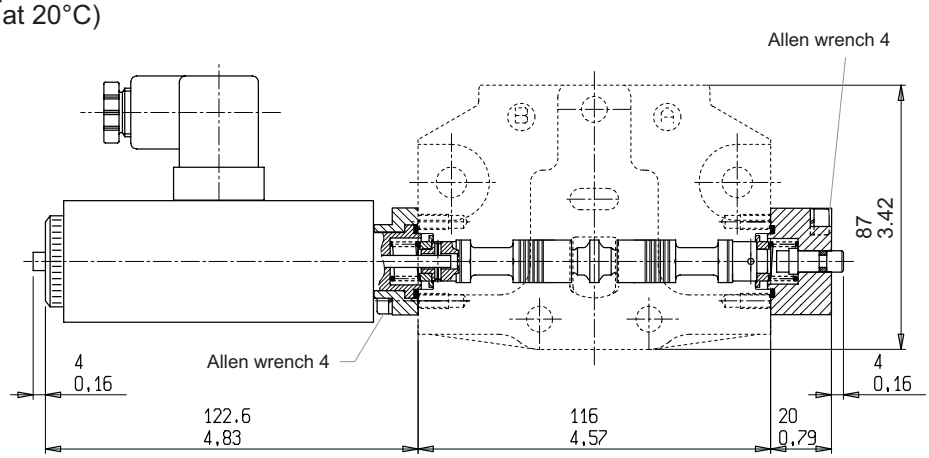

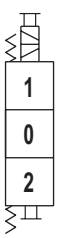

ES

Emergency lever for electric push-pull control

ELECTRIC CONNECTIONS SCHEME

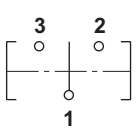

1) NEGATIVE POLE
2) SPOOL IN
3) SPOOL OUT
4) GROUND WIRE

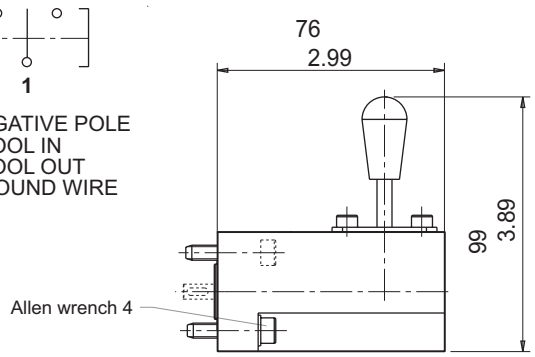

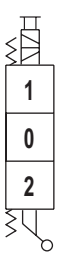

Important: this lever was realized as emergency lever and it'isnot recommended a continuos use.

IP

Important:
when you order please specify top or side ports

Hydraulic proportional control

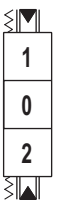

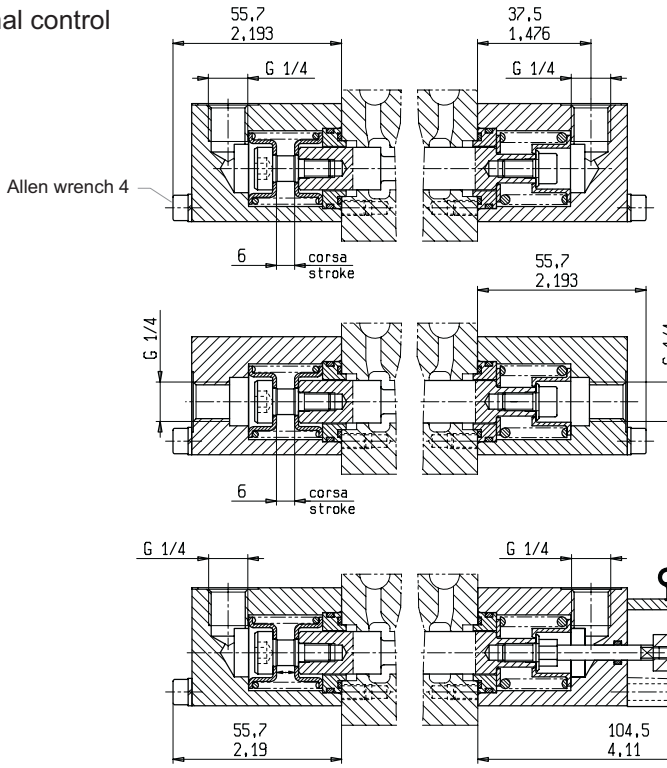

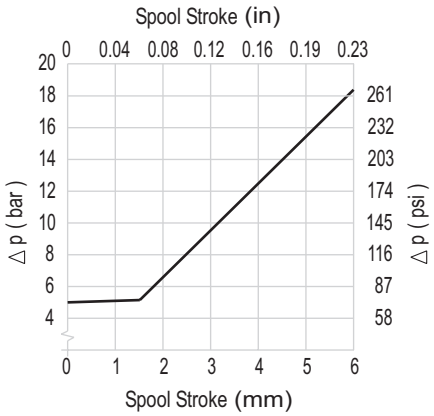

Salami hydraulic
2 axis joystick

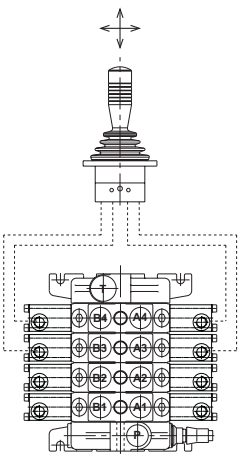

Hydraulic proportional control with emergency lever. Available for q.ty please get in touch with our sales dept.

For more information please consult our catalogue SHRC hydraulic remote controls.

IF

XA, XB, XF PORTS : G 1/4

Hydraulic proportional control
with third float position (spool in)

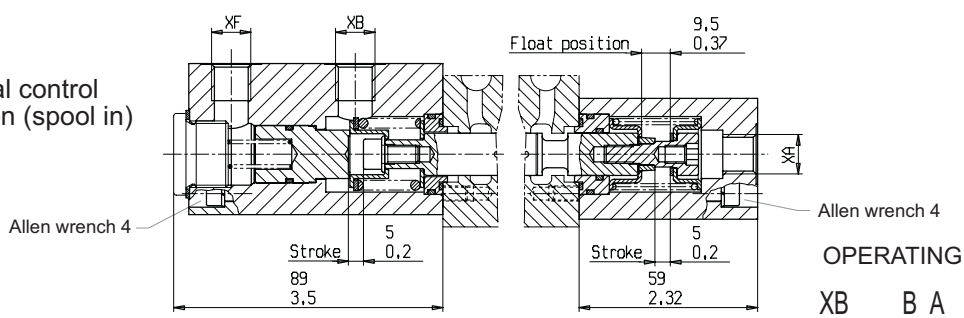

OPERATING SCHEME

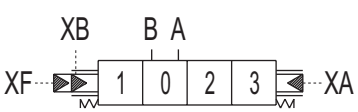

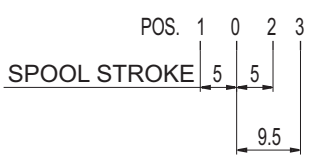

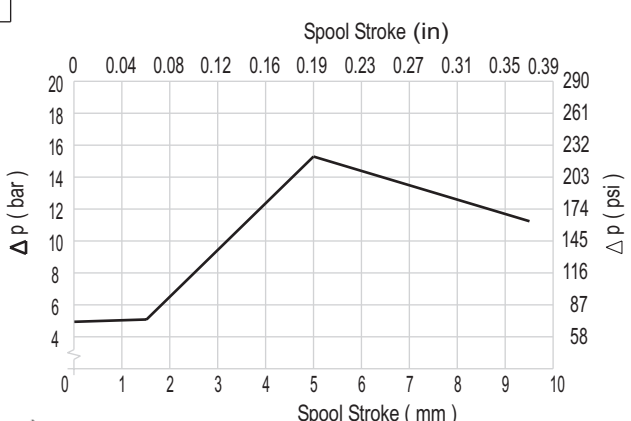

XA,XB,XF → T ⇒ POS. 0
Pressure → XB ⇒ POS. 1
Pressure → XA,XF ⇒ POS. 2
Pressure → XA ⇒ POS. 3

Thought for all truck hydraulic applications

PP/P0

Pneumatic proportional/on-off control

Available also with ports threaded 1/8 NPT

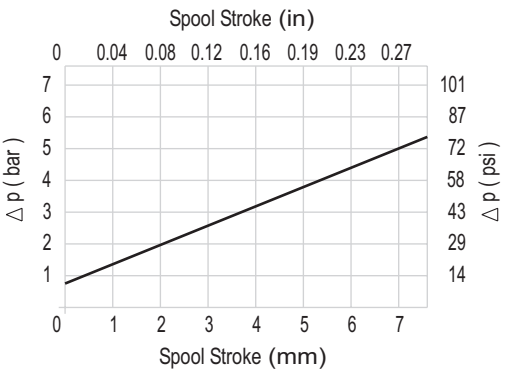

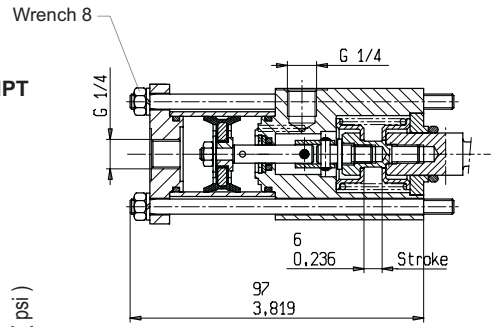

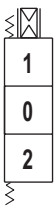

Pneumatic proportional/on-off control
This control is at the same time proportional and on-off type, it depends if you use a pneumatic remote control proportional type(with the characteristic curve of diagram), or on-off type.

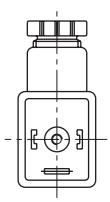

CONNECTOR
DIN 43650 - A/ISO 4400

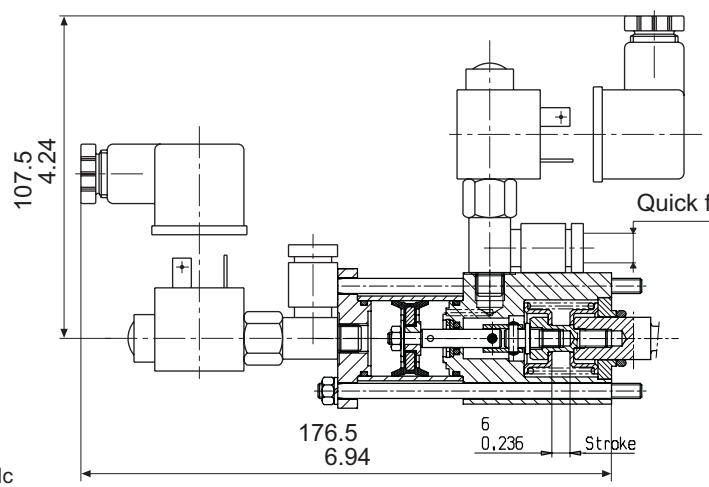

P1

Electro-pneumatic on-off control - 12 Vdc

P2

Electro-pneumatic on-off control - 24 Vdc

ELECTRICAL DATA

- VOLTAGE: 12Vdc OR 24Vdc
- COIL POWER: 6 Watt at 20°C
- PROTECTION INDEX WITH CONNECTOR: IP 65

Starting from PP/PO adding the electro-valves you get P1 or P2

OPERATING SCHEME

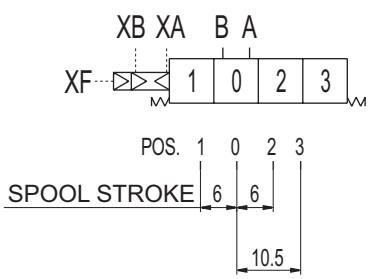

XA,XB,XF → T ⇒ POS. 0
Pressure → XB ⇒ POS. 1
Pressure → XA,XF ⇒ POS. 2
Pressure → XA ⇒ POS. 3

XA, XB, XF PORTS : G 1/4

PQ

Pneumatic on-off control with third float position (spool in)

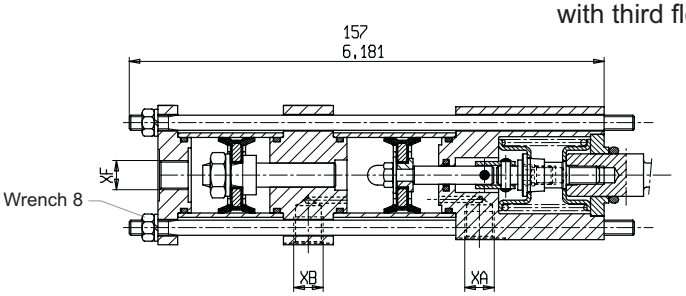

For electro-pneumatic control with third float position, please get in touch with our sales dept.

Preliminary specifications about electro-hydraulic controls

Before to introduce electro-hydraulic single modules it is necessary to specify the adding hydraulic components necessary for the right functioning of it.As you can see in the drawing and hydraulic scheme it needs a pressure reducing valve "PRV" at the inlet of piloting circuit that reduce the pressure of "P" line at the max value of 25 bar (363 psi), a back pressure "CPV" on neutral line that assure a min. pressure of 8 bar (116 psi) and some accessories as fittings, pipe and filter.The pressure reduction at the piloting circuit inlet and the minimum value of neutral line can be obtained also with external standard valves made by valve manufacturers, for this reason Salami electro-hydraulic controls can be supplied without "PRV" and "CPV".

In this case is necessary to specify it in phase of order.

Our standard supply has the "Tp" port opened, we recommend to connect it directly to tank because a counter-pressure could be cause of malfunction.

With reference to page 26, "OUTLET MODULES", the outlet U8 is shown in the hydraulic scheme here below, remember that with a special sleeve instead of "CPV" valve you can change U8 in a power beyond outlet type "U5".

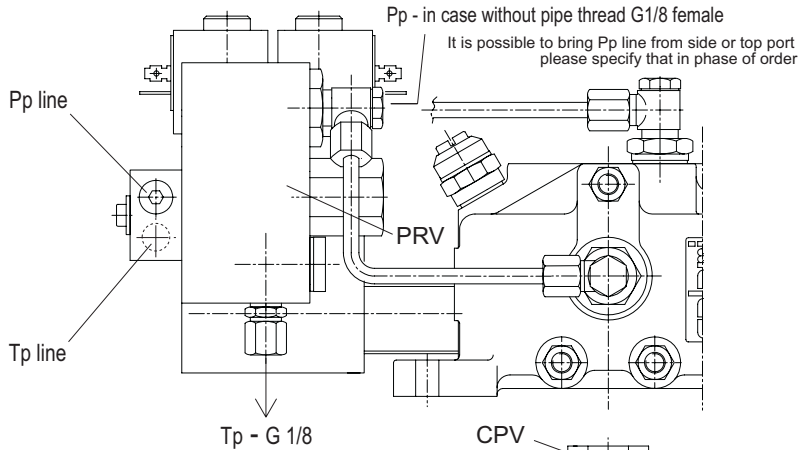

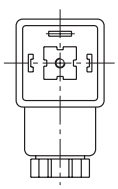

CONNECTOR DIN 43650 - A/ISO 4400
PROTECTION INDEX IP65

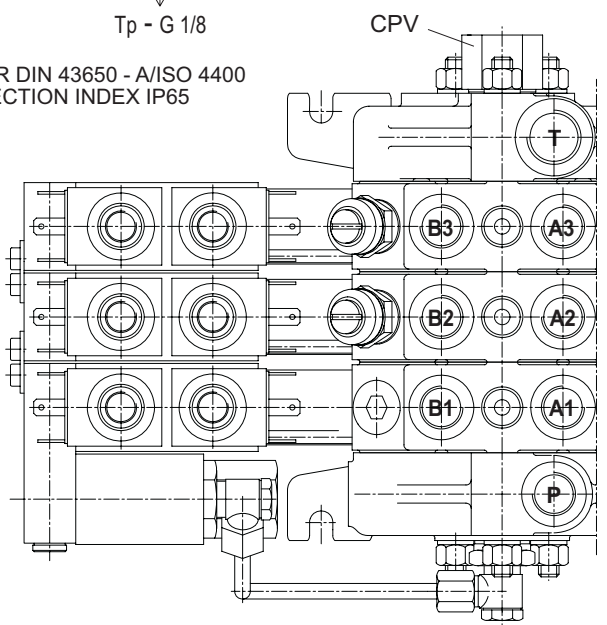

INDEX

PRV - pressure reducing valve

CPV - counter pressure valve

Pp - pressure piloting line

Tp - tank piloting line

P - P port

T - T port

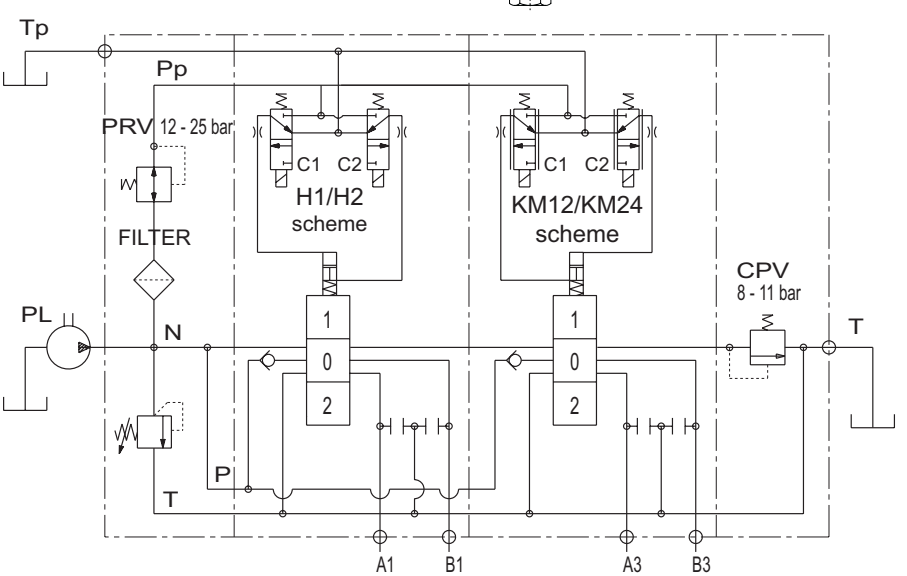

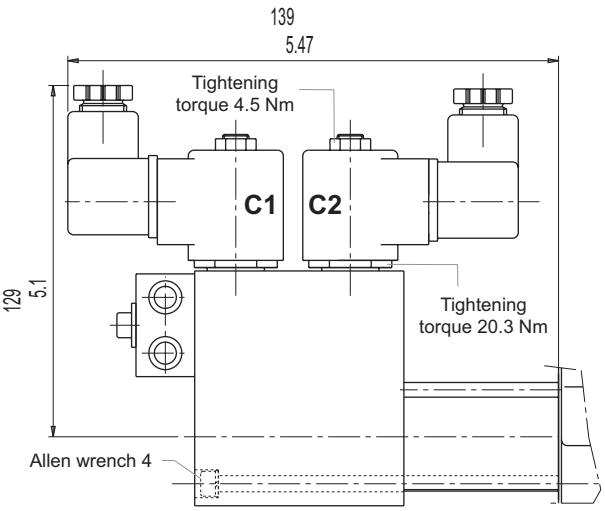

OPERATING INSTRUCTIONS
please see the hydraulic circuit
of page before

C1 - C2	coils de-energized	⟹	POS. 0
C1	coil energized	⟹	POS. 1
C2	coil energized	⟹	POS. 2

TECHNICAL DATA

- MAX PRESSURE IN "P"	70 bar
- MAX FLOW	11 l/min
- AVAILABLE VOLTAGE	12 - 24 Vcc
- POWER	18 W (20°C)

H1

ON-OFF
electro-hydraulic control
12 Vdc

H2

ON-OFF
electro-hydraulic control
24 Vdc

CR

Rotary control, available for 1 working section or two working section but one at the opposite side of the other. This device was realized for marine applications, so all the material components are corrosion proofing. This control uses special type spools, available types are: 01 - 02.Mountable on both side (A or B).

Device with cam and adjustable friction detent + rotary laver

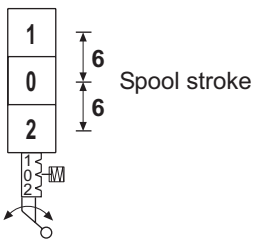

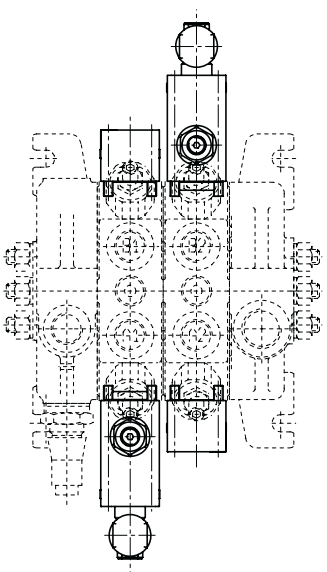

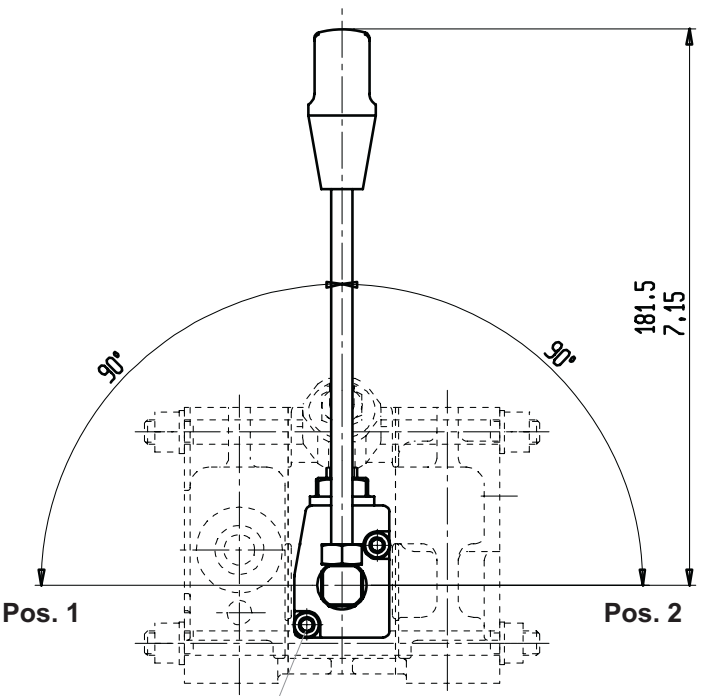

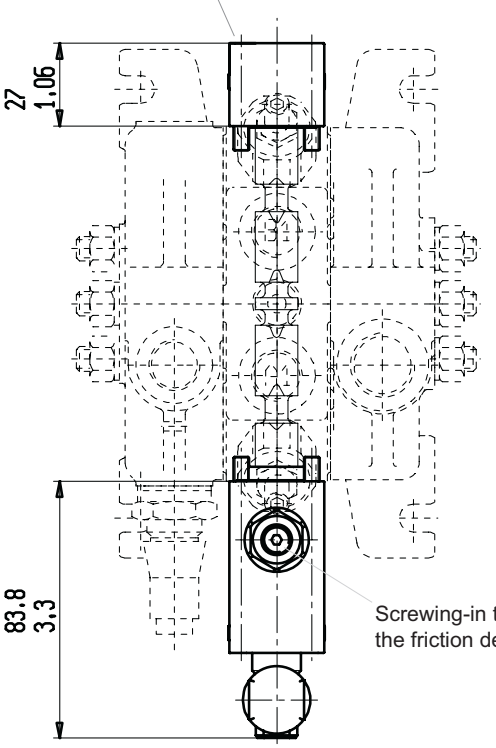

SPOOL POSITIONINGS

C2

Spring centered to neutral position

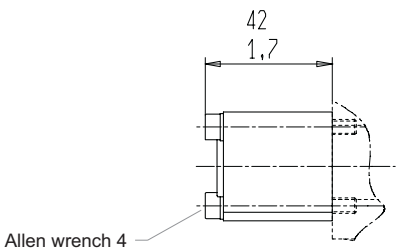

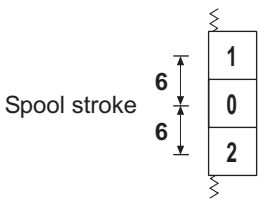

C5

Two positions (neutral/pos. 2)
with spring return in neutral

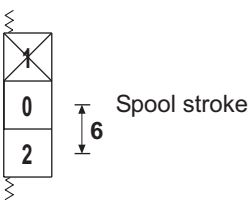

C6

Two positions (neutral/pos. 1)
with spring return in neutral

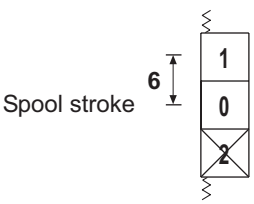

C3

Spring centered to neutral
(pivot threaded male
for remote control)

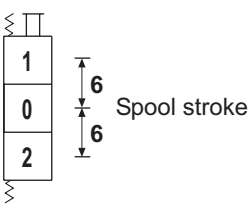

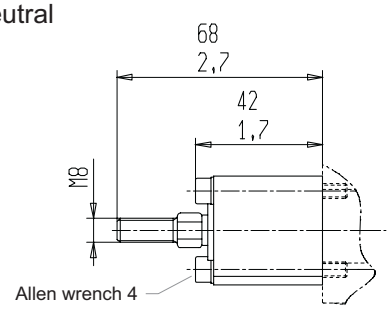

C4

Spring centered to neutral
(pivot threaded female
for remote control)

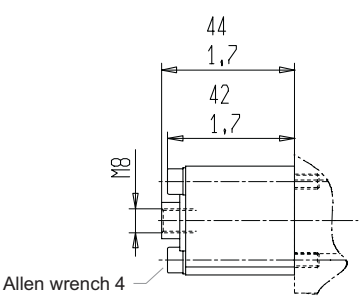

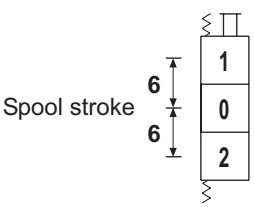

C7

Two positions (pos. 1/pos. 2)
with spring return in pos. 1

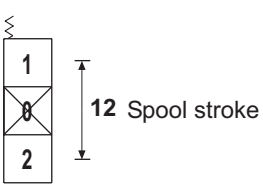

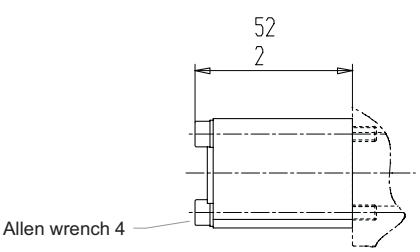

C8

Two positions (pos1/pos. 2)
with spring return in pos. 2

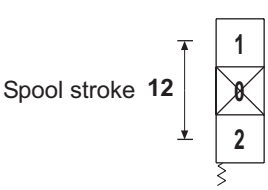

R2

Detent on pos. 1/pos. 2
with spring return in neutral

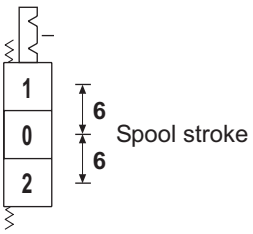

R5

Detent on pos. 2
with spring return in neutral

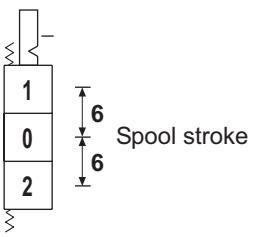

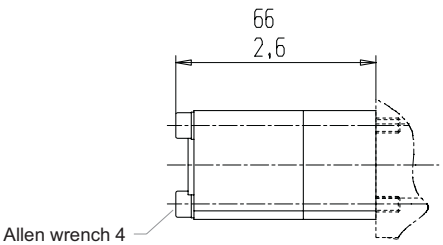

R4

Detent on pos. 1
with spring return in neutral

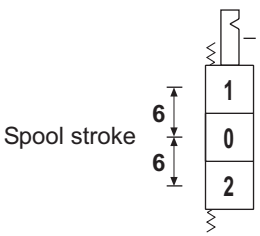

R6

Two positions with detent on pos. 2
with spring return in neutral

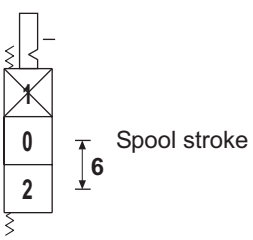

R7

Two positions with detent on pos. 1
with spring return in neutral

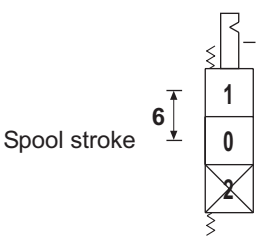

CO

Detent on each intermediate positions

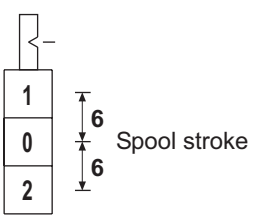

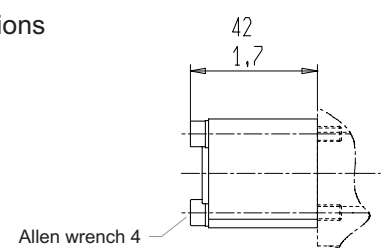

R9

Detent on pos. 1/pos. 2
and neutral position

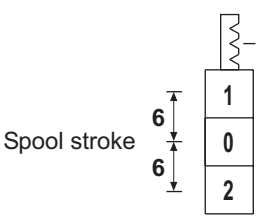

F1

Detent on pos. 3
with spring return in neutral

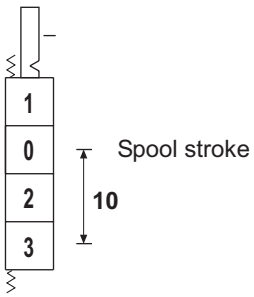

F2

Detent on pos. 1/pos. 2/pos. 3
with spring return in neutral

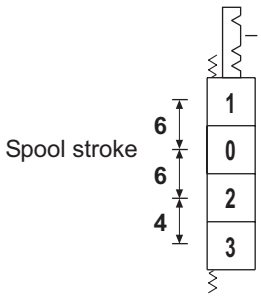

F3

Detent on pos. 1/pos. 3
with spring return in neutral

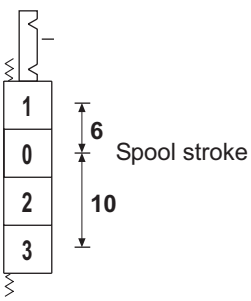

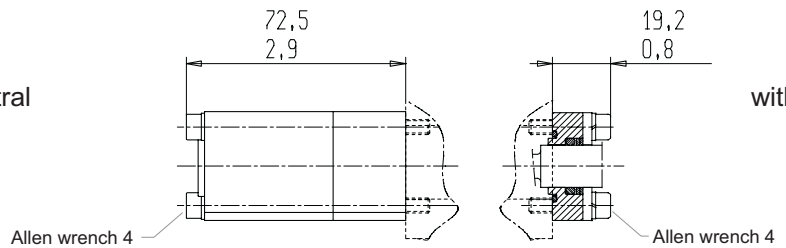

F4

Detent on pos. 2/pos. 3
with spring return in neutral

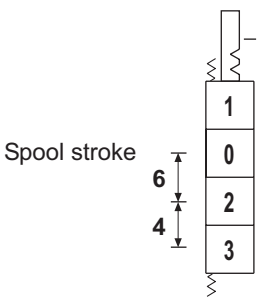

F5

Detent on pos. 3
with spring return in neutral

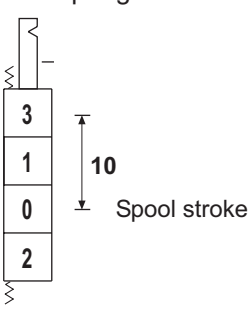

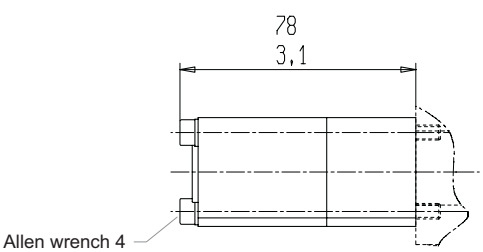

F6

Detent on pos. 1/pos. 3
with spring return in neutral

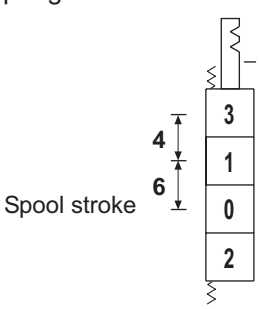

F7

Detent on pos. 2/pos. 3
with spring return in neutral

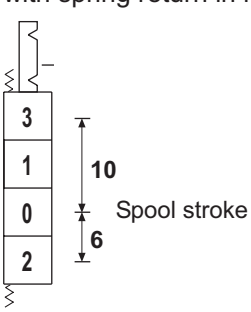

F8

Detent on pos. 1/pos. 2/pos. 3
with spring return in neutral

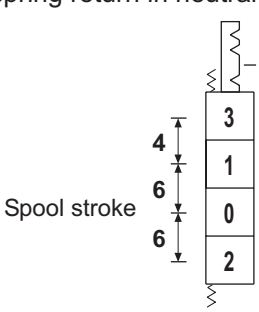

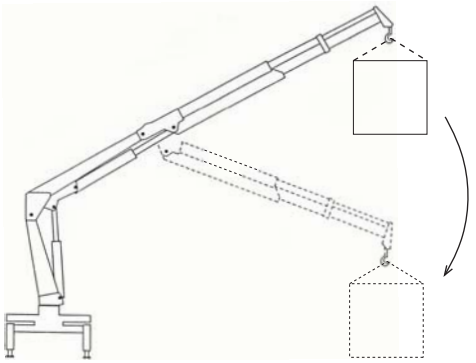

For manifacturers using load and overturning torque limiting device for hydraulically operated cranes, Salami VD6A valve is available with some devices that allow the manifacturer to supply a pressure signal inside itself.This pressure signal, acting on the area of a piston of 18 mm(0.71 inc.) diameter, reacts to the force of the manual control bringing back the spool at the position 0.
These devices are only available in combination with manual control.

D9

Device for spool positioning in 0 from the positions 1 and 2 by an external pressure signal. For tie-rod connection.

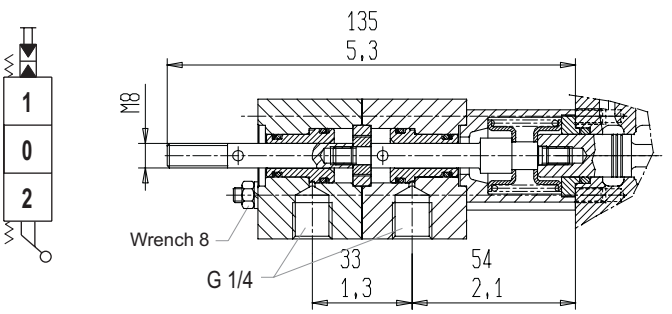

M3

Device for spool positioning in 0 from the positions 1 and 2 by an external pressure signal.

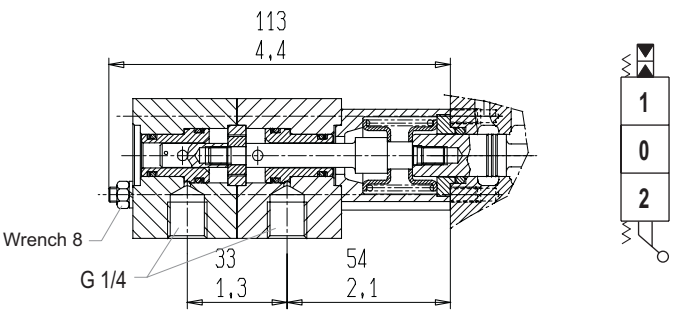

D8

Device for spool positioning in 0 from the position 1 by an external pressure signal. For tie-rod connection.

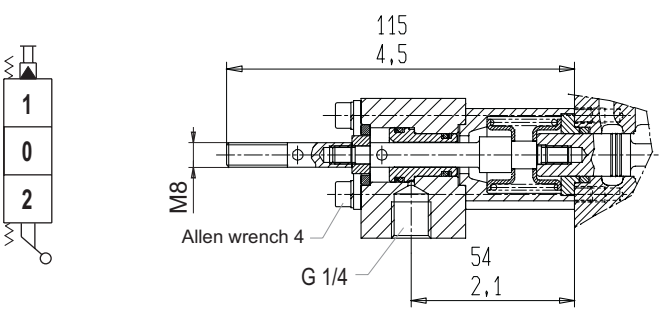

M1

Device for spool positioning in 0 from the position 1 by an external pressure signal.

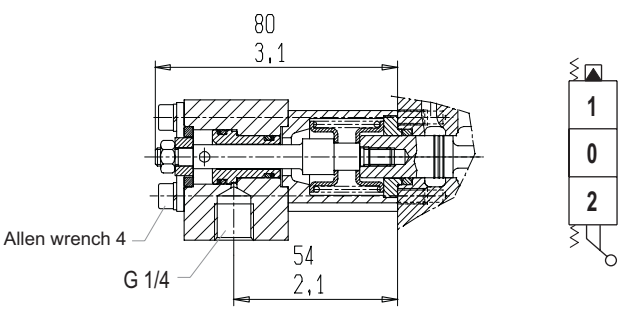

D7

Device for spool positioning in 0 from the position 2 by an external pressure signal. For tie-rod connection.

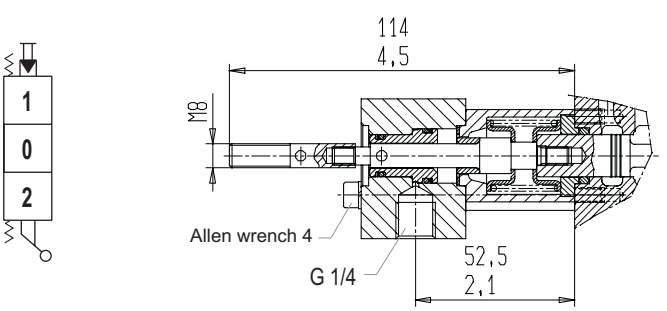

M2

Device for spool positioning in 0 from the position 2 by an external pressure signal.

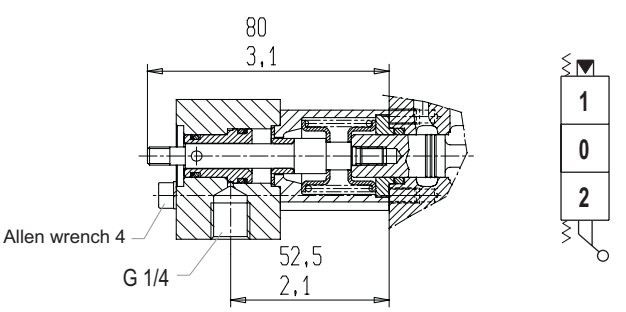

CE

Pre-arrangement for electrical device

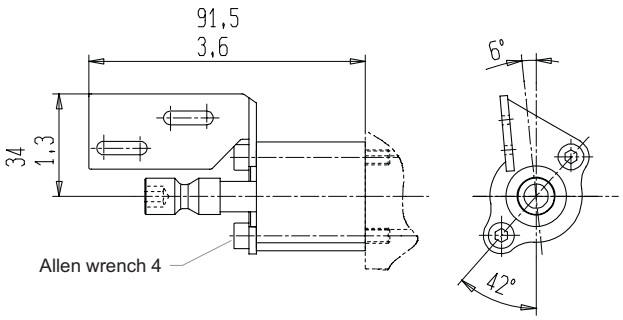

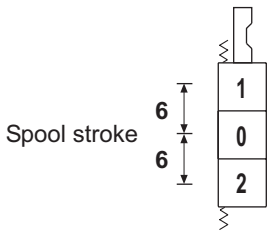

MICROSWITCH TYPE: SAIA - BURGESS XGK - 88
For more information please get in touch with our sales dept.

CM

Spool positioning with microswitch to start an electric motor (available also for single acting spools)

PROTECTION INDEX
IP65

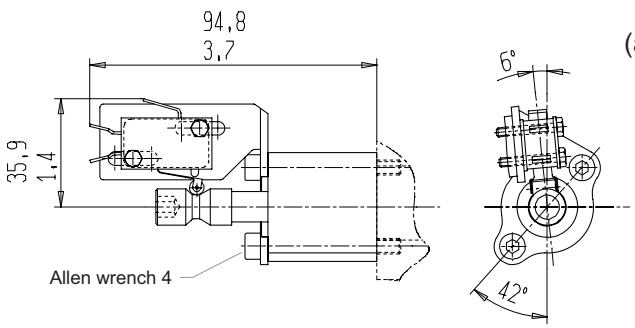

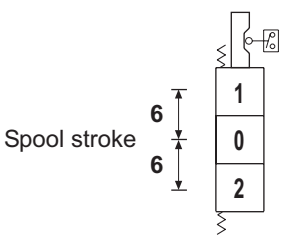

CW

Spool positioning with waterproof microswitch to start an electric motor (available also for single acting spools)

PROTECTION INDEX
IP67

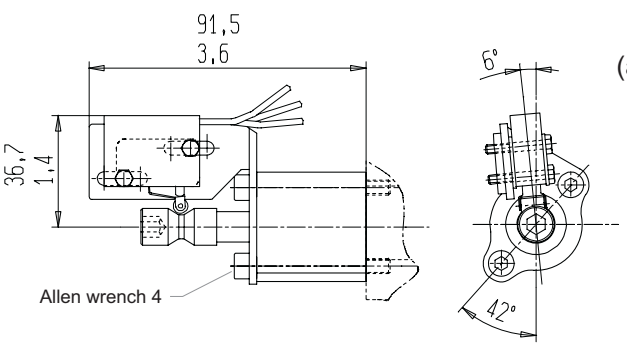

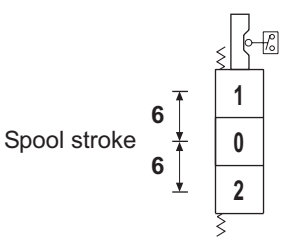

CD

Spool positioning with double microswitch (available also for single acting spools)

PROTECTION INDEX
IP65

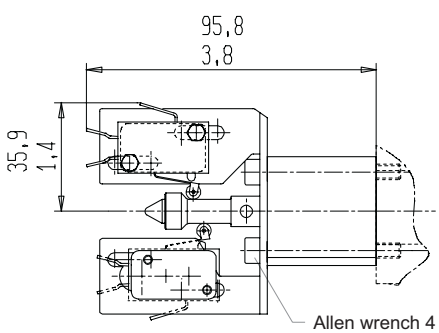

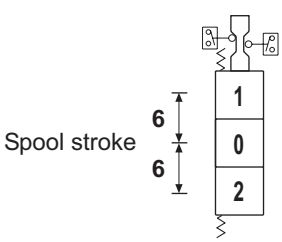

PM

Spool positioning with microswitch to start
an electric motor and potentiometer
to run up speed motor
(available also for single acting spools)

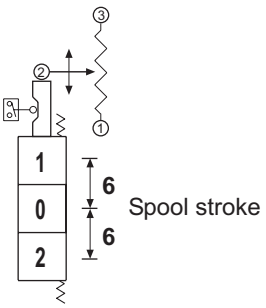

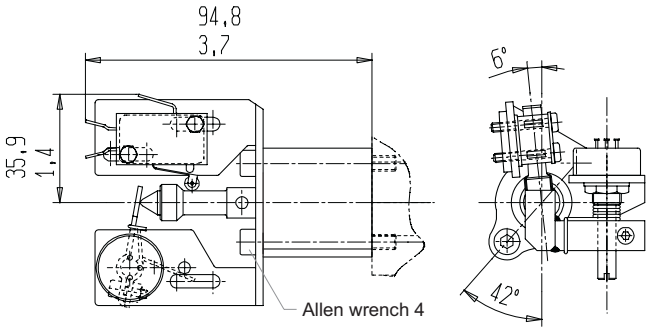

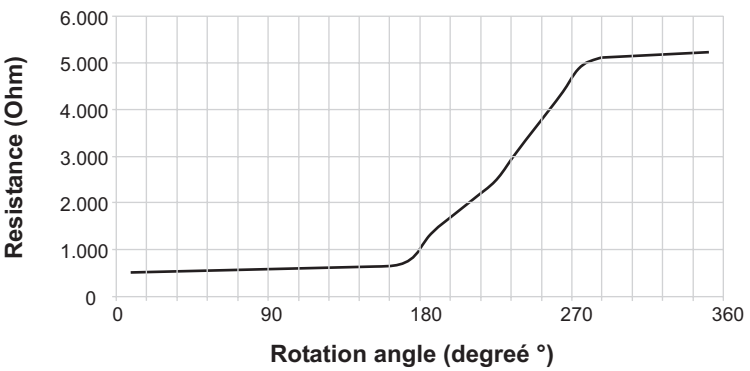

IMPORTANT:
When you order, please specify the setting pressure of the device.
With this type of spool positiong a special machining of the body is required.

G2

Detent on pos. 1/pos. 2
with hydraulic kick-out

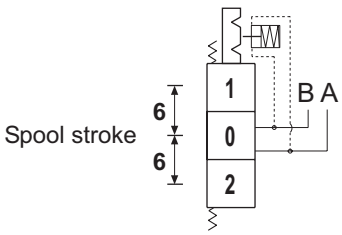

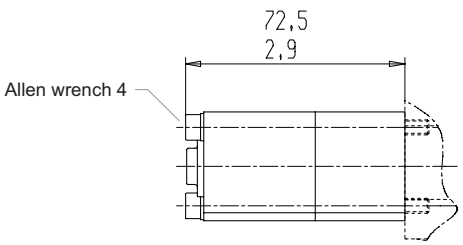

G5

Detent on pos. 2
with hydraulic kick-out

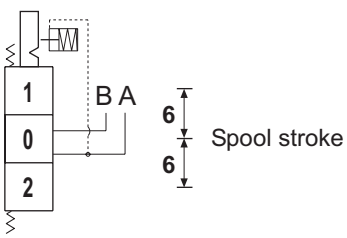

G4

Detent on pos. 1
with hydraulic kick-out

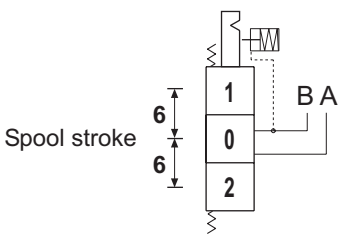

G6

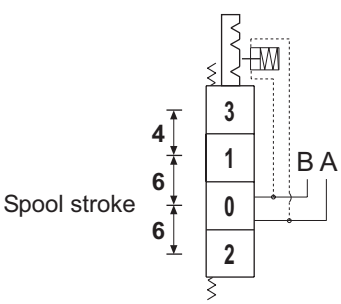

Detent on pos. 1/pos. 2/pos. 3
with hydraulic kick-out
on pos. 1 and pos. 2
and manual release on pos. 3

G8

Detent on pos. 2/pos. 3
with hydraulic kick-out
on pos. 2
and manual release on pos. 3

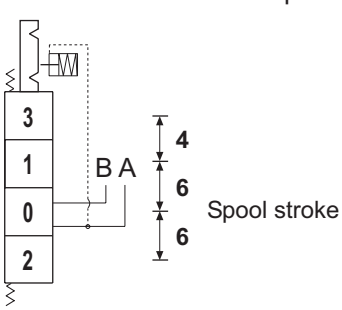

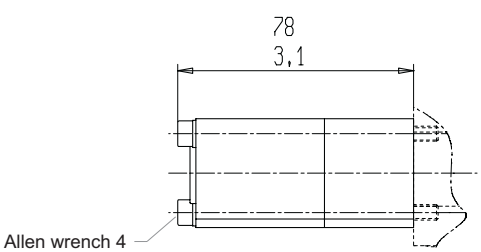

G7

Detent on pos. 1/pos. 3
with hydraulic kick-out
on pos. 1
and manual release on pos. 3

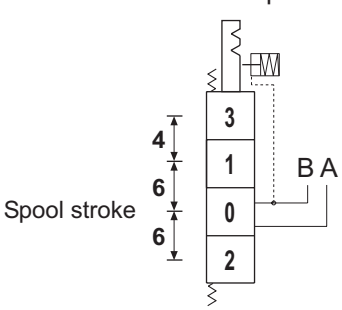

DIRECTIONAL CONTROL VALVE
SECTIONAL TYPE

How to order/ VD6A

VD6A 01 D 180 – EV2 / 2 X P 01 A – VA 165 A . AR 140 B – NL A – C2 / I2 G

/ P 01 A – PR 000 A . PR 000 B – NL A – C2 / U1 G

INLET CONFIGURATION
See from page 10 to 15

MAIN RELIEF VALVE (PAG. 30)

D	Direct main relief valve
W	Without main relief valve

MAIN RELIEF VALVE SETTING (bar)
See page 30

VENTING VALVE
See page 31

NUMBER OF IDENTICAL CONSECUTIVE SECTIONS

WORKING MODULES - CIRCUIT TYPE (PAG. 16 - 21)

P	Parallel circuit working module (page 16)
S	Series circuit working module (page 17)
T	Tandem circuit working module (page 18)
P*	Paral. circ. working mod. for inlet with priority flow valve (page 19)
T*	Tandem circ. working mod. for inlet with priority flow valve (page 19)
P	Paral. circ. double working mod. with load check valve VUM (page 20)
T	Tandem circ. double working mod. with load check valve VUM (page 21)

SPOOL TYPES (PAG. 28 - 29)

01	Double acting spool
02	Double acting motor spool
03	Double acting motor spool ("B" port blocked)
04	Double acting motor spool ("A" port blocked)
05	Single acting spool "A" working port
06	Single acting spool "B" working port
11	Double acting spool with float function in 3rd pos. (spool in)
12	Double acting spool with float function in 3rd pos. (spool out)
13	Double acting spool with regenerative function in position 3 (spool in)
17	Double acting spool with regenerative function in position 2 (spool in)
18	Double acting spool with regenerative function in position 1 (spool out)
52	Over center double acting spool "A" working port
53	Over center double acting spool "B" working port
54	Over center double acting spool "A" and "B" working ports

SPOOL CHOICE ACCORDING TO THE INLET FLOW (PAG. 28)

A	Nominal flow
C	2/3 of the nominal flow

AUXILIARY VALVES (PAG. 32 - 34)

VA	Adjustable overload valve (available settings at page 32)
AR	Adjustable overload and anti-cavitation valve (available settings at page 32)
VR	Anti-cavitation valve (page 32)
CV	Conversion valve (page 33)
PR	Pre-arrangement for auxiliary valve (page 34)
ST	Flow restrictor P ® A/B (page 34)
SP	Flow restrictor A/B ® T (page 34)
EV..	Electric venting valve (page 33)
EHV	External piloted venting valve (page 33)

PORTS (PAG. 9)

G	GAS threaded
S	SAE threaded
M*	METRIC threaded
G*	JIS B 2351 threaded

MID INLET AND OUTLET CONFIGURATION
See hydraulic scheme and commercial codes of page 22 - 25

OUTLET CONFIGURATION
See hydraulic scheme and commercial codes of page 26

SPOOL POSITIONINGS

Page 45 C2 - C3 - C4 - C5 - C6 - C7 - C8
Page 46 R2- R4 - R5 - R6 - R7 - R9 - C0
Page 47 F1 - F2 - F3 - F4 - F5 - F6 - F7 - F8
Page 48 D7 - D8 - D9 - M1 - M2 - M3
Page 49 - 50 CE - CM - CW - CD - PM
Page 51 G2 - G4 - G5 - G6 - G7 - G8

CONTROL SIDE (PAGE 35)

SPOOL CONTROLS

Without lever box page 36 - SL
Handle controls from page 36 to 38 NL - MP - PF - L1/L2 - LX1/LX2 - L1*/L2*
Device for cable remote control page 39 TC
Direct electric control and emergency device page 39 E7 - E8 - E9 - E10 - E11 - E12 - ES - SL
Hydraulic controls page 40 IP - IF
Pneumatic and electro-pneumatic controls page 41 PP/P0 - P1/P2 - PQ
Electro-hydraulic controls pages 42 - 43 H1/H2
Device with cam and adjustable friction detent + rotary lever (page 44) CR

For KM proportional electro-hydraulic controls
Please contact our technical dept.

PORT ON WHICH THE VALVE IS MOUNTED (page 35)

*Available for quantity, please contact our sales dept.

DESCRIPTION OF THE NEW PRODUCT IDENTIFICATION LABEL

Based on the firm certification ISO 9001 - UNI EN 29001, section 4.8 (identification and tracebility of the product), we have adopted a new identification label starting from the 1st march 1995. Pls, see following example:

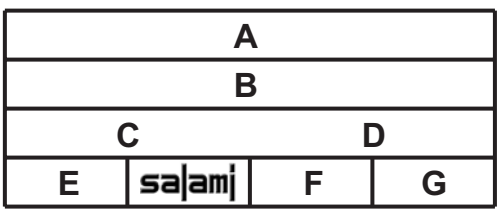

A = Product short descritpion (eg. VD8A/FDD/U4G).

B = Customer part number.

C = Salami part number (eg. 6235 0025 0).

D = Production code (for Salami management)

E = Rotation sense (only for pumps).

F = Production date (see data sheet here below)

G = Progressive number of assembling.

Only for pumps 2PB and 2PZ (except triple 2PB) the identification product is marked on the top of the pump body as shown here below:

SALAMI 09/02
MADE IN ITALY 4010998
612271211 nr. 13
2PB 19S B25 B5

Product short description.

Salami part number and progressive number of assembling.

Production code (for Salami management).

Mounth and year of made: maybe in the future you can find this type of production date in the label beside too.

Rotation sense.

ASSEMBLED	1997	1998	1999	2000	2001	2002	2003	2004	2005	2006	2007	2008	2009	2010	2011	2012
JANUARY	7A	8M	9M	0M	1M	2M	3M	4M	5M	6M	7M	08M	09M	10M	11M	12M
FEBRUARY	7B	8N	9N	0N	1N	2N	3N	4N	5N	6N	7N	08N	09N	10N	11N	12N
MARCH	7C	8P	9P	0P	1P	2P	3P	4P	5P	6P	7P	08P	09P	10P	11P	12P
APRIL	7D	8Q	9Q	0Q	1Q	2Q	3Q	4Q	5Q	6Q	7Q	08Q	09Q	10Q	11Q	12Q
MAY	7E	8R	9R	0R	1R	2R	3R	4R	5R	6R	7R	08R	09R	10R	11R	12R
JUNE	7F	8S	9S	0S	1S	2S	3S	4S	5S	6S	7S	08S	09S	10S	11S	12S
JULY	7G	8T	9T	0T	1T	2T	3T	4T	5T	6T	7T	08T	09T	10T	11T	12T
AUGUST	7H	8U	9U	0U	1U	2U	3U	4U	5U	6U	7U	08U	09U	10U	11U	12U
SEPTEMBER	7I	8V	9V	0V	1V	2V	3V	4V	5V	6V	7V	08V	09V	10V	11V	12V
OCTOBER	7J	8Z	9Z	0Z	1Z	2Z	3Z	4Z	5Z	6Z	7Z	08Z	09Z	10Z	11Z	12Z
NOVEMBER	7K	8X	9X	0X	1X	2X	3X	4X	5X	6X	7X	08X	09X	10X	11X	12X
DECEMBER	7L	8Y	9Y	0Y	1Y	2Y	3Y	4Y	5Y	6Y	7Y	08Y	09Y	10Y	11Y	12Y

WARRANTY

- We warrant products sold by us to be free from defects in material and workmanship.

- Our sole obligation to buyer under this warranty is the repair or replacement, at our option, of any products or parts thereof which, under normal use and proper maintenance, have proven defective in material or workmanship, this warranty does not cover ordinary wear and tear, abuse, misuse, averloading, alteration.

- No claims under this warranty will be valid unless buyer notifies SALAMI in writing within a reasonable time of the buyer's discovery of such defects,but in no event later than twelve (12) mounths from date of shipment to buyer.

- Our obligation under this warranty shall not include any transportation charges or cost of installation, replacement, field repair, or other charges related to returning products to us; or any liability for directs, indirects or consequential damage or delay.If requested by us, products or parts for which a warranty claim is made are to be returned transportation prepaid to our factory. The risk of loss of any products or parts thereof returned to SALAMI will be on buyer.

- No employee or representative is authorized to change any warranty in any way or grant any other warranty unless such change is made in writing and signed by an officer of SALAMI.

SALAMI spa
via Emilia Ovest 1006
41100 Modena Italy
telefono +39-059-387411
telefax +39-059-387500
export@salami.it - www.salami.it

SALAMI ITALIA srl
strada Pelosa 183
S. Pietro in Trigogna VI Italy
telefono +39-0444-240080
telefax +39-0444-240204
salami.italia@salami.it

SALAMI ESPAÑA
Poligono Industrial Armenteres
C/Primer de Maig, 18, Nave 4
08980 San Feliu de Llobregat
Barcelona
telefono +34-93-6327288
telefax +34-93-6667826
info@salamispain.com

SALAMI FRANCE
22, rue Louis Saillant
69120 Vaulx en Velin
Lyon
telefono +33-04-78809941
telefax +33-04-78803669
e.pasian@wanadoo.fr

149 S0. Chenango St. Ext.,
GREEN, NY 13778
Tel.: +1-607-6565702
Fax.: +1-607-6565704
info@salamihydraulics.com